HEAVY ION ACCELERATORS FOR RIKEN RI BEAM FACTORY AND UPGRADE PLANS

H. Okuno#, T. Fujinawa, N. Fukunishi, A. Goto, Y. Higurashi, E. Ikezawa, O. Kamigaito, M. Kase, T. Nakagawa, J. Ohnishi, Y. Sato, Y. Yano, RIKEN Nishina Center, Saitama, Japan
P. Ostroumov, ANL, Argonne, IL 60439, U.S.A.

Abstract

Since 1997 RIKEN Nishina center has been constructing a next-generation exotic beam facility, RI beam factory (RIBF), based on a powerful heavy ion driver accelerator. Its accelerator complex was successfully commissioned at the end of 2006 and started supplying heavy ion beams in 2007. However, the beam intensity now available is far below our goal of 1 pμA (6 x 10^{12} #/s). In order to achieve it, upgrade plans are under way, including the construction of a new 28 GHz superconducting ECR ion source. The new ECR will take all the succeeding accelerators and beam transport lines to a space charge dominant regime, especially the front end section, which should be carefully reconsidered to avoid emittance growth due to space charge forces. Simulation results using the code TRACK show that space charge forces largely affect the beam dynamics in all the sections.

INTRODUCTION

RIKEN Nishina center has undertaken construction of an RI Beam Factory (RIBF) [1] since April 1997 aiming to realize a next generation facility that is capable of providing the world's most intense RI beams at energies of several hundred MeV/nucleon over the whole range of atomic masses. The RIBF requires an accelerator complex which would accelerate the full mass range of ions and deliver ~80 kW of uranium beam at an energy of 345 MeV/nucleon. Figure 1 shows a bird's eye view of RIBF. The left part is the old facility completed in 1990. Using the four-sector K540-MeV ring cyclotron (RRC) [2], many experiments were carried with RI beams of light ions because RRC can accelerate relatively light ions up to 100 MeV/u, which is the lower limit for the RI-

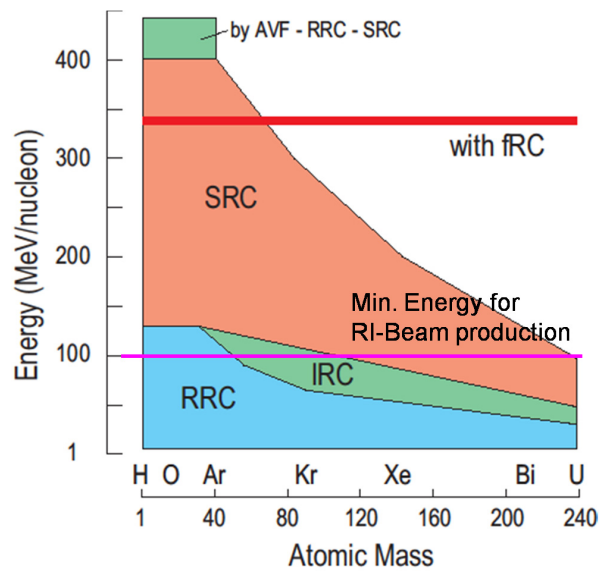

Figure 2: Performance of the RIBF accelerator complex.

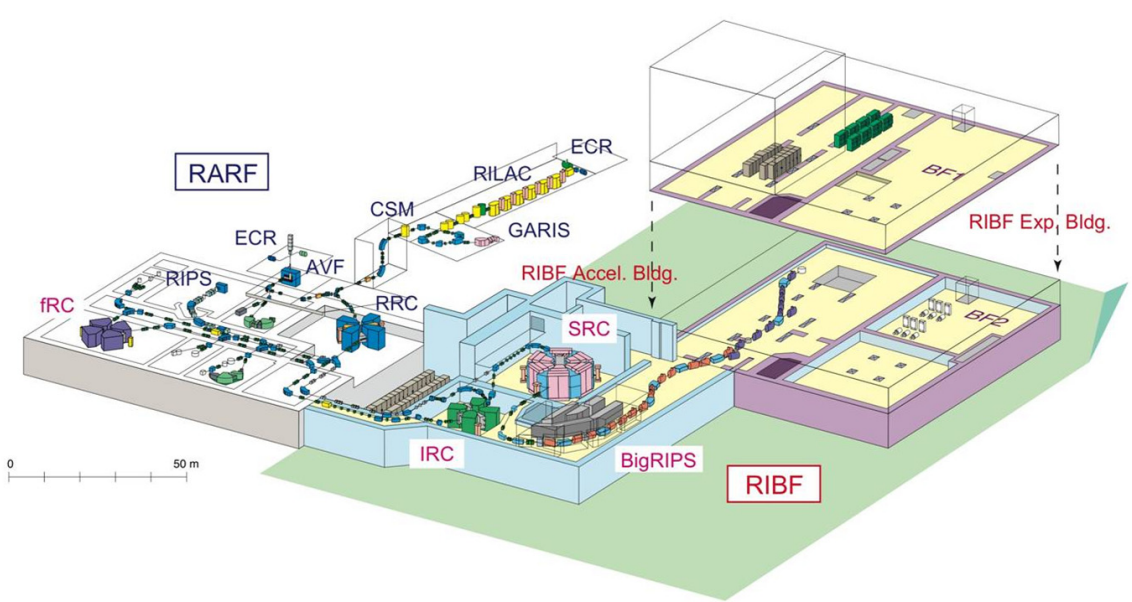

Figure 1: A bird's eye view of RI Beam Factory.

okuno@riken.jp

beam production as shown in Fig. 2. At first, the two ring cyclotrons, Intermediate Ring Cyclotron (IRC) [3] and Superconducting Ring Cyclotron (SRC) [4] were designed as energy boosters for the RRC in order to expand the mass range where RI beams can be produced as shown in Fig. 2. In 2000, after the appearance of the RIA project in the US [5], we realized that all the ion beams including uranium can be accelerated up to the maximum energy of 345MeV/u by adding another cyclotron, a fixed-frequency ring cyclotron (fRC) [6], before the IRC. In this way, we are now able to generate a wide variety of RI beams from hydrogen to uranium.

The critical path of the RIBF project was the sequence of the accelerator building construction and the assembling of the SRC, which is the world's fist ring cyclotron using superconducting sector magnet with largest bending power. We could successfully start the assembling of the superconducting sector magnets just after the completion of the accelerator building at the end of March 2003. The sector magnets were completed in September 2005, and were successfully excited at the maximum field level for the first time on November 7. The field maps of the sector magnets were measured for about two months in April- June 2006, and the rf resonators and vacuum chambers were then installed.

The beam commissioning of the fRC started in July 2006 with the acceleration of a uranium beam. The $^{238}U^{73+}$ ion beam passed through the electrostatic deflector of the fRC for the first time on July 21. The commissioning of the IRC started after the rooms on November 22. The $^{84}Kr^{31+}$ ion beam, the charge-to-mass ratio of which is close to that of $^{238}U^{88+}$, was accelerated and extracted from the IRC for the first time on November 25; it took as little as about 2 hours for the tuning from the injection and extraction. Finally the first beam of $^{27}Al^{10+}$ was successfully extracted from the superconducting ring cyclotron, at 4 pm on December 28, 2006. [7, 8]

In the following sections, this paper will briefly describe the operational status of the RIBF accelerators and upgrade plans. Simulation results using TRACK [9] code will be also described.

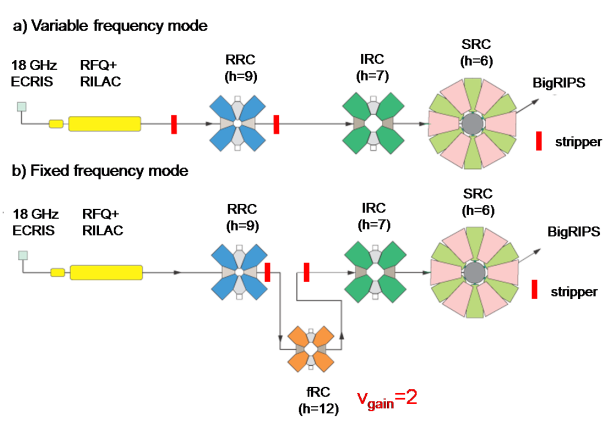

Figure 3: The two acceleration modes for RIBF accelerators. The variable and fixed frequency modes are listed in the upper and lower parts, respectively.

OPERATIONAL STATUS OF RIBF ACCLERATORS

The main two acceleration mode for RIBF accelerator will be described before showing the beam intensity. Figure 3(a) shows the variable frequency mode. Generated ions from the 18GHz ECR [10] are accelerated through the two linacs: a variable-frequency (FCRFQ) [11], a variable-frequency heavy-ion linac (RILAC) [12], and the three cyclotrons: RRC, IRC and SRC with the two strippers [13]. For example the main parameters are listed in the Table 1 to boost the energy of Kr ion up to 345 MeV/u. The fundamental rf frequency is 36.5 MHz. 18+Kr ions from the source are converted to 26+ through the 1st stripper before the RRC and 34+ ions converted at the 2nd stripper are injected to the IRC. However, this mode is not available for acceleration of uranium ions up to 345 MeV/u because its charge state could not reach 70+, which is the minimum acceptable charge state for the RRC. To realize this acceleration, we developed a new mode as shown in Fig. 3(b). In this mode the injector linacs and RRC operate at half of 36.5 MHz and the decrease in the acceleration voltage is compensated by adding another ring cyclotron fRC between the RRC and IRC whose velocity gain is 2. This mode is operated at the fixed frequency of 18.25 x n MHz because the accelerating cavities of fRC are not frequency tunable.

The accelerated beams using RIBF accelerators in 2007 and 2008 are listed in Table 2. The first uranium beam was successfully extracted in March 2007 in the fixed frequency mode. This uranium beams contributes to the finding of the new isotopes ^{125}Pd and ^{126}Pd [14], although its intensity was such weak as 1/100000 times of the goal intensity. After that, we accelerated krypton beam with 30 pnA last November for a short period. In 2008 we focused to increase the beam intensity up to IRC because the He refrigerator for the SRC had a serious oil contamination from the He compressors. Ca ions could be accelerated with as a high intensity as 200pnA. The long term

Table 1: The main parameters for the variable and fixed frequency modes. F, Q and E/A are rf frequency in MHz, charge state and beam energy in MeV/nucleon.

(a) Variable frequency mode (ex. ^{86}Kr)

	RFQ+ RILAC	1st Str.	RRC	2nd Stri	IRC	SRC
F	36.5		36.5		36.5	36.5
Q	18	→	26	→	34	36.5
E/A	2.3		46		114	345

(b) Fixed frequency mode (ex. ^{238}U)

	RFQ+ RILAC	RRC	1st Str.	FRC	2nd Str.	IRC	SRC
F	18.25	18.25		54.8		36.5	36.5
Q	35	35	→	71	→	86	86
E/A	0.67	11		51		114	345

stability of the beam was good. Uranium beams were also improved. We guess that about 8 times the beams currents of 2007 were extracted from the IRC because Faraday cups in 2007 have tendency to read more current than the real one due to secondary electron emission.

UPGRADE PLANS

From the operational status mentioned in the previous section, key issues to increase the intensity of uranium ion beams can be clearly pointed out as follows. First, we need more beams from the ion source. Now we are constructing a new 28GHz superconducting ECR ion source which is designed to have as large plasma volume as 1100 cm^3 [15, 16]. This ion source is expected to produce U^{35+} ions at an intensity of more than 15 pμA, which is necessary to obtain 1 pμA beams from the SRC. We hope to start the test in this fiscal year. Next, we need a new injector which efficiently accelerates ion beams from the new powerful ion source in order to avoid the emittance growths due to their space charge forces. Finally we need to make charge stripper with long lifetimes. This paper will focus on the second issue. Fig. 4 shows a plan for the new injector which is designed to accelerate ions with a mass-to-charge ratio of 7, aiming at heavy ions such as $^{84}Kr^{13+}$, $^{136}Xe^{20+}$ and $^{238}U^{35+}$, up to energy of 680 keV/nucleon. It consists mainly of the SC-ECR, an RFQ linac based on the four rod structure and three drift-tube linac (DTL) based on the quarter-wavelength resonator (QWR) [17]. A four-rod structure RFQ [18] denoted by Kyoto University will be recycled for this purpose after some modifications to change the resonance frequency by about 10 %. However, the other parts are not funded. So now design works and fabrication for Plan B shown in Fig. 5 are in progress, which is a way to enjoy the high intensity from the new powerful ion source at minimum cost. Low frequency operation of the RFQ preinjector at 18.25MHz requires such low extraction voltage as 5kV in the uranium acceleration. High power beams of 5kV surely grow up due to their space charge forces in the low energy transport line. On the other hand, RILAC requires such low injection energy as 127kV. The 28GHz ECR ion source can then be put on

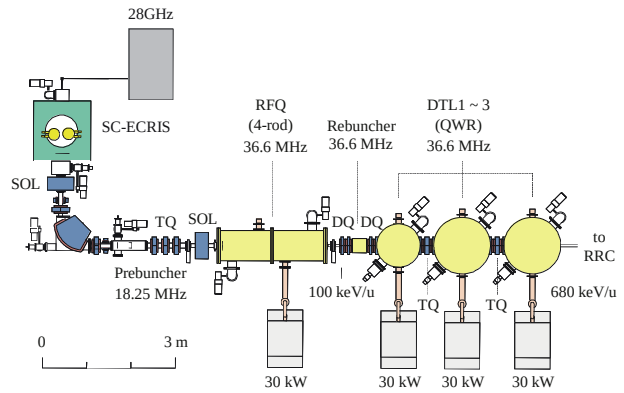

Figure 4: A plan of the new injector.

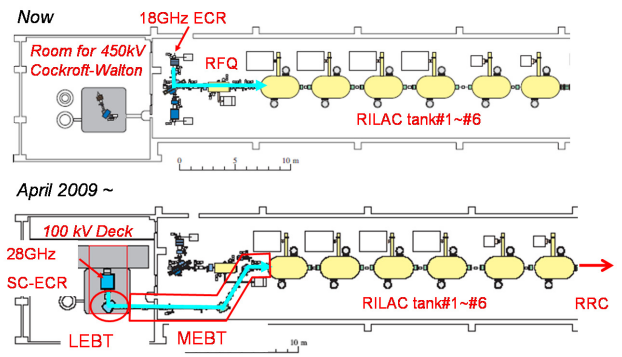

Figure 5: A plan of the new injector (Plan B).

a 100kV deck so that extracted beam from the source can be directly injected to the RILAC, skipping the RFQ. We expect that the emittance growth can be suppressed in the beam transport system. This plan B is easy for us because we can use a room for the former injector to the RILAC, 450kV Cockroft-Walton as shown in Fig. 5. Some parts for BT line will be also recycled.

Table 2: Intensities of the beams accelerated so far. A 1/2 attenuator was installed between the 1st stripper and the RRC injection in the acceleration test of Ca.

(a) Fixed frequency mode (pnA = 6 x 10^9 #/sec)

	ION	ECRIS out	RFQ out	RILAC out	RRC out	1st Str. out	FRC out	2ndStri out	IRC out	SRC out
June 2007	U	50.3	40	19/7	25.1	1.76	1.55	0.31	0.21	0.093
July 2008	U	----	44	16.3	15.1	1.87	2.00	0.53	0.35	---

(b) Variable frequency mode (pnA = 6 x 10^9 #/sec)

	ION	ECRIS out	RFQ out	RILAC out	1st Str. out	RRC out	2nd Stri. out	IRC out	SRC out
Nov. 2007	Kr	---	---	---	---	---	---	---	30
June 2008	Ca	---	---	---	688/2	363	310	270	---

SIMULATION USING THE TRACK CODE

Using the TRACK, we code simulated beam dynamics in the LEBT, MEBT, RILAC and RRC for the Plan B of the injector upgrade plan. Each section was separately simulated with the initial conditions listed in Table 3. These simulations are important to understand what happen in each section. The end-to-end simulation and details of the simulations will be presented in ref [19].

LEBT

The LEBT consists of an extraction region, a glaser solenoid focusing lens, and a 90 degree bending analyzing magnet for charge selection. The bending radius and edge angle of the bending magnet are selected to be 510mm and 27 degree, respectively to provide double focusing. First, the separation of U(34+), U(35+) and U(36+) at the selection point was checked at the 0mA limit, showing well separation of the three charge states. However, more realistic simulations should include space charge forces

Table 3: Initial parameters used in the simulations. Normalized emittance εn, twiss parameters α an β are listed in each section.

(a) LEBT Kinetic energy: 3.971 keV/u			
Ion [current (mA)] :U35+[0.525], O2+ [1.44],O3+[2.47] , O4+[2.58], O5+[1.94], O6+[1.57]			
	εn (cm mrad)	α	β (cm/rad)
Horizontal	0.05839	0.0	12.5
Vertical	0.05839	0.0	12.5
(b) MEBT Kinetic energy: 18.676 keV/u			
Ion [current (mA)]: U35+ [0, 0.5]			
	εn (cm mrad)	α	β(cm/rad)
Horizontal	0.025989	0.0	14.0
Vertical	0.025989	0.0	14.0
(c) RILAC Kinetic energy; 18.676 keV/u			
Ion [current (mA)]: U35+ [0, 0.5]			
	εn (cm mrad) (deg %)	α	β(cm/rad) (deg/%)
Horizontal	0.075989	0.5743	22.69
Vertical	0.075989	0.0872	132.3
longitudinal	7.0	0.0	2.0
(d) RRC Kinetic energy; 670 keV/u			
Ion [current (mA)]: U35+ [0, 0.5]			
	εn (cm mrad) (deg %)	α	β(cm/rad) (deg/%)
Horizontal	0.01895	0.0	400.0
Vertical	0.01895	0.0	400.0
Longitudinal	12.06	0.0	20.0

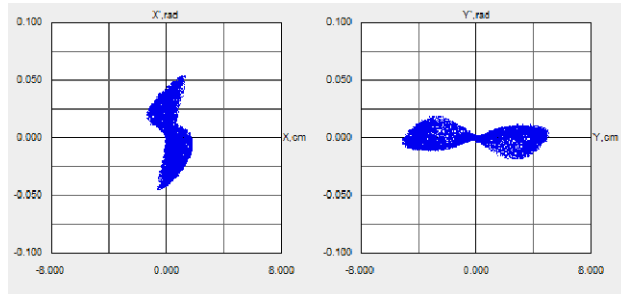

Figure 6: Emittance plot of U35+ at the end of the LEBT in case of 50% neutralization of the space charge forces.

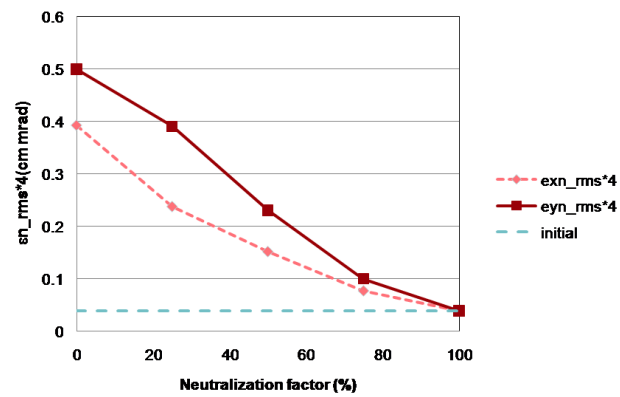

Figure 7: Normalized emittance in the horizontal and vertical direction at the exit of the LEBT is listed versus neutralization factor of the space charge forces.

from not only uranium ions themselves but also the other ion species extracted from the ion sources. U(35+) and five O(2+, 3+, 4+, 5+, 6+) ions were simultaneously transported through the LEBT, assuming different neutralization factors by electrons from residual gases. The calculation results show that emittance of the U beam grows with large distortion as the neutralization factor decreases. For example Fig. 6 shows an emittance plot in the horizontal and vertical direction in the case of 50 % neutralization. Fig. 7 summarizes the emittance versus the neutralization factor. However, nobody knows how much space charge forces can be neutralized in our system until the real ion beams are extracted and transported to the LEBT.

MEBT

After the ion beams from the LEBT are accelerated in the accelerating tube, they are transported to the entrance of the RILAC through the MEBT. In the MEBT DC beams from the ion source are bunched in the 1st and 2nd harmonics buncher so that the RILAC can accept the beams effectively. The model consists of eight quadrupole magnets, two 60 degree bending magnets and the buncher installed about 1 m before the entrance of the RILAC. This configuration is not finalized and could be easily changed if needed. The field gradients of the quadrupole

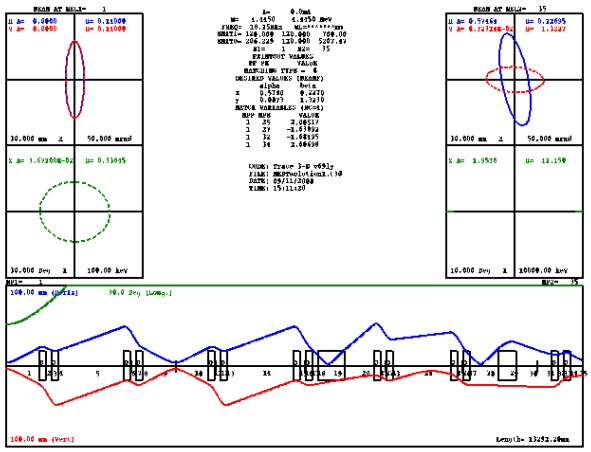

Figure 8: Beam envelope in the MEBT. Emittance plots at its entrance and exit are also shown in the upper parts.

magnets were obtained from the simulation using TRACE 3D [20] so that the Twiss parameters of emittance ellipses at the entrance of the RILAC match those of the acceptance ellipses as shown in Fig. 8. The two cases of 0mA and 0.5mA were studied. The result in the case of 0mA shows 100 % transmission and a normal bunch structure at the entrance of the RILAC as shown in the left graph of Fig. 9. The transmission in the case of 0.5mA is 98%. A bunched phase plot in the case of 0.5mA is shown in the right graph of Fig. 9. Although defocusing effects due to space charge forces are slightly observed in the case of 0.5 mA, both cases can collect about 51% of the DC beams within ±10 degree. All the results for MEBT show that the beam energy in the MEBT is high enough to suppress the emittance growth.

RILAC

The RILAC consists of six variable-frequency cavities. The model treated the motion in the rf gaps with the impulse approximation; with sinusoidally varying voltage, the ions were assumed to gain kinetic energy at the midgap where they were exposed to the rf defocusing force at the same time. The validity of this approximation in such low energy region should be checked by comparing with the results using more realistic models. The model also includes the quadrupole magnets embedded in the drift tubes and inserted between the tanks. Fig. 10 shows the simulation results in the case of 0mA. About 99% beams can reach at the exit of the

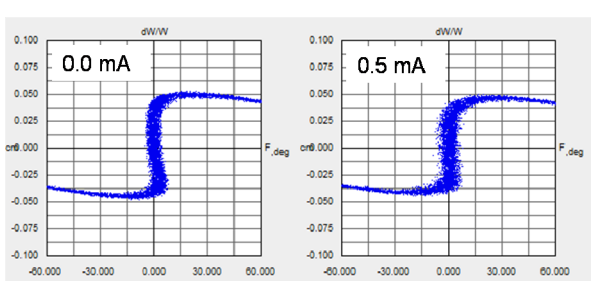

Figure 9: Longitudinal emittance plots at the exit of the MEBT in the case of 0.0 mA and 0.5mA.

RILAC. The transmission decreases to 87% even by retuning the field gradients of the quadrupole magnets in the case of 0.5 mA. The normalized 4*RMS emittances in the transversal and longitudinal direction were plotted along the beam axis of the RILAC for both cases in Fig. 11, showing that the space charge forces produce a significant emittance growth. These emittance growths will decrease the transmission efficiency in the succeeding cyclotrons. If we like to handle the 0.5mA beam without loss, we need the new injector described in the previous section which allows us to efficiently accelerate high-intensity beams.

RRC

The model of the RRC is constructed by a fourfold symmetry hard-edge magnet description. After fixing the accelerator constants like RF and harmonic number, the reference energy is calculated as functions of the radius. Starting from these data the total circumference of the static reference orbit can be calculated. The length of the orbit part inside the magnets is determined by the bending radius. In this simulation model 27% of the total turns, about 265turn were included. Fig. 12 shows that the phase

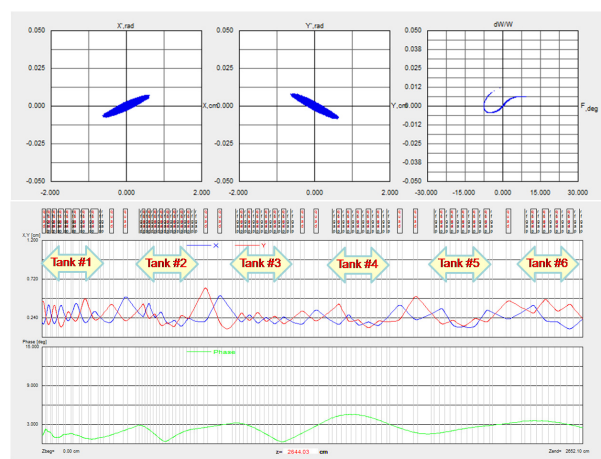

Figure 10: Simulation results for RILAC (0 mA).

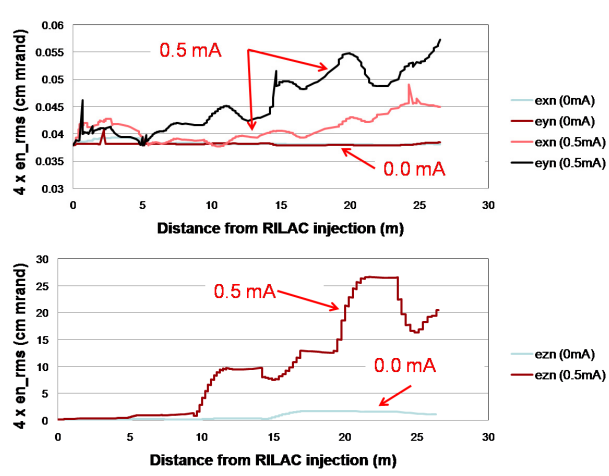

Figure 11: Normalized emittance plots in the transversal (upper) and longitudinal (lower) direction along the beam axis of the RILAC. Results for both cases of 0.0 mA and 0.5 mA are shown.

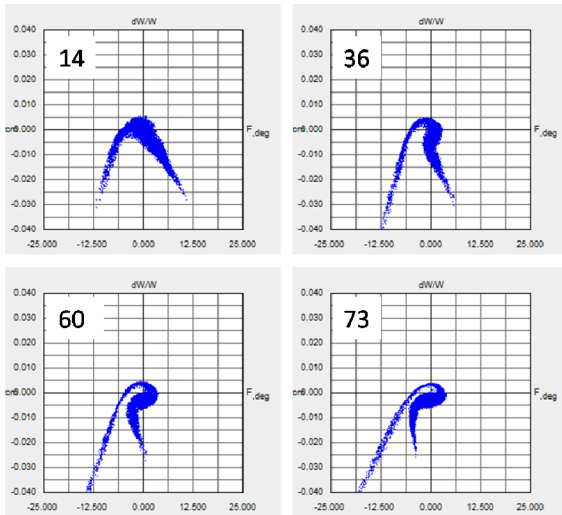

Figure 12: Longitudinal emittance plots in the RRC. The number in each graph is the turn number after the injection.

ellipse rotates as the beams turn around, finally the phase ellipse become in round shape in the case of 0.5 mA. This suggests that "round beam" formation, which is a well-known phenomenon in the PSI injector II [21], may occur in the RRC.

SUMMARY AND FUTURE WORK

After the successful commissioning of the RIBF accelerator at the end of 2006, upgrade plans are underway to increase the intensity especially of uranium 345 MeV/u beams from SRC. For this purpose a 28GHz superconducting ECR ion source is under construction. Simulations of the beam dynamics in the LEBT, MEBT, RILAC and RRC were performed using the TRACK code to know how much space charge forces of high-intensity uranium beams from the new source will affect the beam emittance. End-to-end simulations from LEBT to RRC will be performed as the next steps.

ACKNOWLEDGEMENTS

The authors would like to thank Dr. B. Mustapha at Argonne National Laboratory, who provides us with the detailed instructions of the TRACK code.

REFERENCES

[1] Y. Yano, Nucl. Instrum. Methods Phys. Res., Sect. B **261** (2007) 1009.

[2] M. Kase *et. al.*, proceedings of the 17th Int. Conf. on Cyclotrons and Their Applications, Yoyogi, Tokyo (2004) 160.

[3] J. Ohnishi *et. al.*, proceedings of the 17th Int. Conf. on Cyclotrons and Their Applications, Yoyogi, Tokyo (2004) 197.

[4] H. Okuno, *et. al.*, IEEE Trans. Appl. Supercond., **18** (2008) 226.

[5] "ISOL Task Force Report to NSAC", http://www.sc.doe.gov/np/nsac/docs/ISOLTaskForceReport.pdf .

[6] N. Inabe *et. al.*, proceedings of the 17th Int. Conf. on Cyclotrons and Their Applications, Yoyogi, Tokyo (2004) 200.

[7] N. Fukunishi, J. Particle Accelerator Society of Japan, Vol. 4. No.2 112 (2007).

[8] A. Goto, *et. al.*, proceedings of the 18th Int. Conf. on Cyclotrons and Their Applications, Giardini Naxos, Italy (2007) 3.

[9] P.N. Ostroumov, V.N. Aseev, and B. Mustapha., Phys. Rev. ST. Accel. Beams 7, 090101 (2004).

[10] T. Nakagawa and Y. Yano, Rev. Sci. Instrum., **71** (2000) 637.

[11] O. Kamigaito, *et. al.*, Rev. Sci. Instrum., **70** (1999) 4523.

[12] M. Odera, *et. al.*, Nucl. Instrum. Methods A227 (1999) 187.

[13] H. Ryuto, *et. al.*, proceedings of the 18th Int. Conf. on Cyclotrons and Their Applications, Giardini Naxos, Italy (2007) 314.

[14] T. Kubo, *et. al.*, J. Phys. Soc. Jpn. **77** (2008) 083201.

[15] T. Nakagawa, *et. al.*, High Energy Physics and Nuclear Physics **31** (2007) 133.

[16] J. Ohnishi, *et. al.*, High Energy Physics and Nuclear Physics **31** (2007) 37.

[17] O. Kamigaito, *et. al.*, 3rd Ann. Meeting of PASJ and 31th Linac meeting in Japan, Sendai, (2006) 502.

[18] H. Fujisawa, Nucl. Instrum. Methods **A345** (1994) 23.

[19] H. Okuno, *et. al.*, Phys. Rev. ST Accel. Beams, *in preparation.*

[20] K. R. Crandall, Los Alamos Report, No. LA-11054-MS, 1987.

[21] S. Adam, IEEE Trans. Nuclear Science, **NS-32** (1985) 2507.