High Gradient Tests of the HINS SSR1 Single Spoke Resonator

- Outline:
  - 325 MHz Superconducting Spoke Resonators in the Project X Linac (HINS front end).
  - SSR1 Single Spoke Resonator with β_g = .21: Fabrication and low gradient RF measurements.
  - Buffered Chemical Polishing and High Pressure Rinse
  - High gradient measurements in Fermilab's Vertical Test Stand (VTS).

325 MHz Superconducting Spoke Resonators in the Project X Linac and the HINS front end

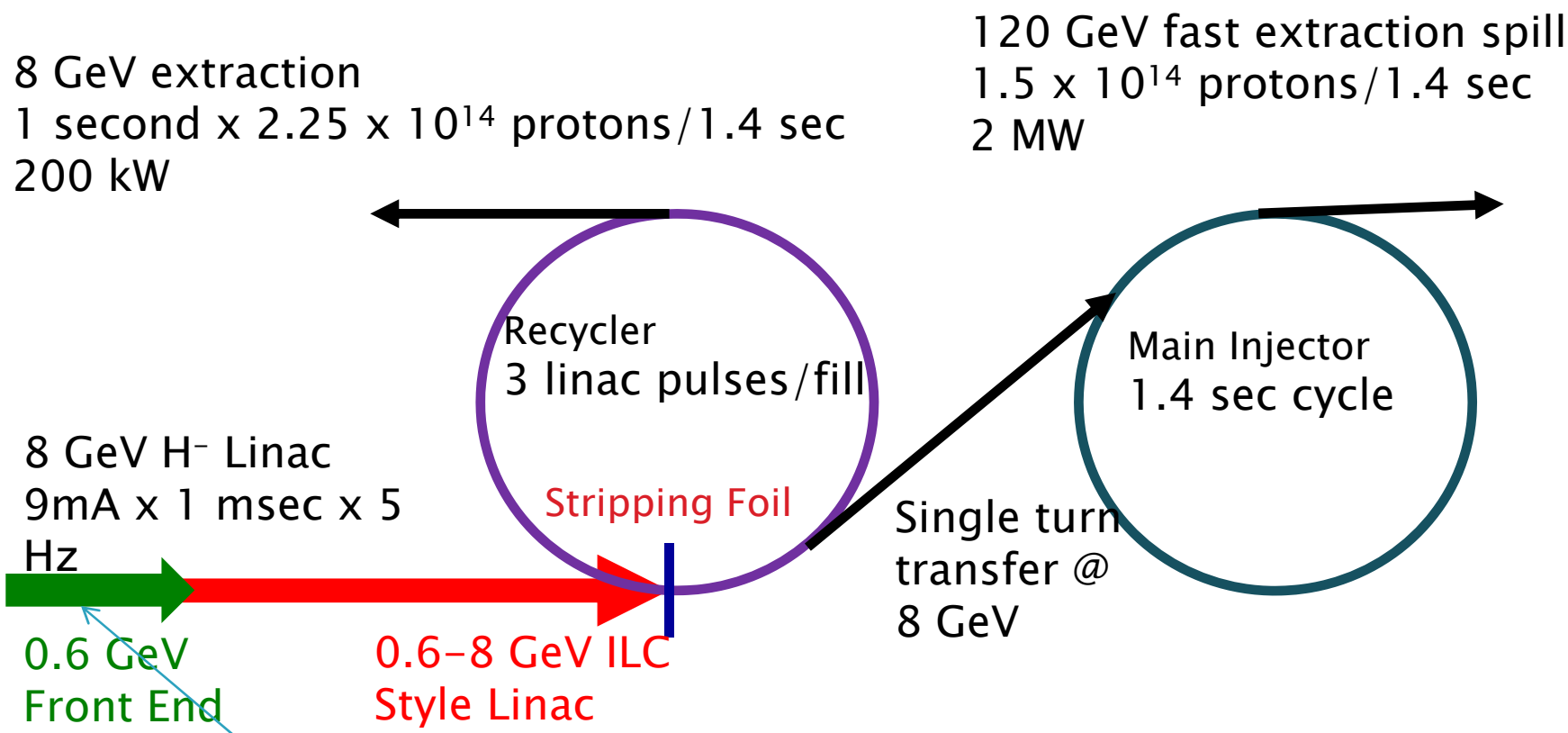

Superconducting Single Spoke Resonators are part of the HINS front end for Project X.

325 MHz Superconducting Spoke Resonators in the Project X Linac and the HINS front end

Quantity	SSR1	SSR2	TSR
Beta design	0.21	0.40	0.62
Nominal E_{acc} (MV/m)	10	10	10
Output Energy (MeV)	30	120	420
# Cryomodules	2	3	7
# Cavities / Cyromodule	9	11	6
# Cavities (total)	18 (18 HINS)	33 (11 HINS)	42

RF design of the SSR1

Quantity	Value
Operating temperature	4.4 K
Accelerating gradient, E_{acc}	10 MV/m
Q_0 at accelerating gradient	$> 0.5 \times 10^9$
Beam pipe, Shell ID	30 mm, 492 mm
Lorenz force detuning coefficient	3.8 Hz/(MV/m)^2 (with He vessel)
E_{peak}/E_{acc} *	3.86
B_{peak}/E_{acc} *	6.25 mT/(MV/m)
G	84 Ω
R/Q_0	242 Ω
Geometrical Beta, β_g	0.21

SSR1-02, the 2nd SSR1 prototype. Fabricated by Roark.

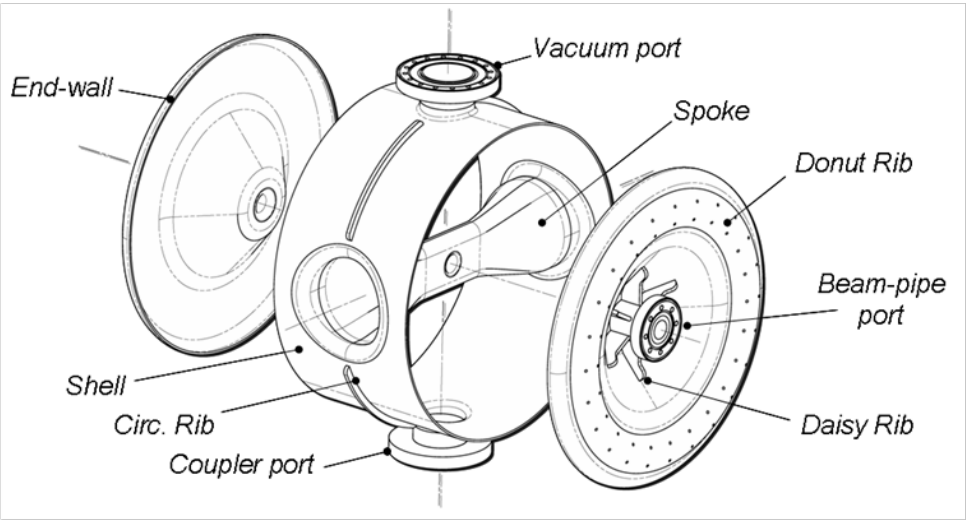

- * Two main criteria of the RF design were to minimize these ratios.

Frequency tune and low gradient RF measurements

- Before the cavity volume is closed with the final welds between the endwalls and the shell, the shell is trimmed in several steps to insure uniformity in the accelerating gaps and the desired resonant frequency.
  - Sensitivity: 376 kHz per mm trimmed.
- After the first prototype, SSR1-01, arrived at Fermilab from Zanon, low gradient RF measurements, including bead pulls, were made to check the resonant frequency and compare the field profile with the calculation of Microwave Studio (MWS). A field flatness of 99.7% was measured.

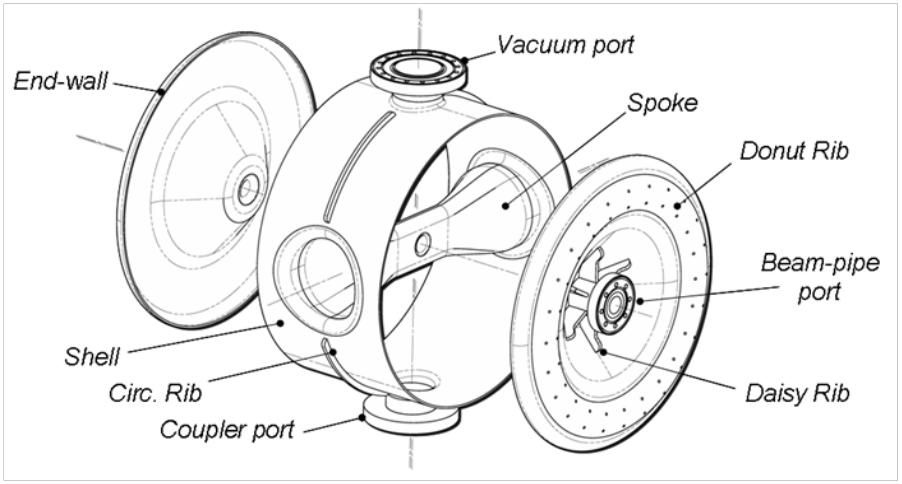

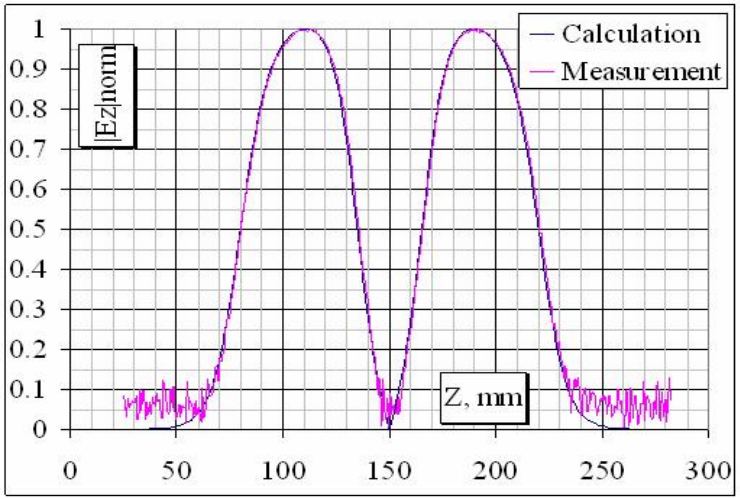

Buffered Chemical Polishing (BCP) of SSR1-01 at the ANL G150 facility

- BCP with standard $HF:HNO_3:H_3PO_4$ 1:1:2 acid mix.
- Etch in two sessions of 70 and 90 minutes. Between sessions:
  - Flip cavity top to bottom
  - Replace spent acid with fresh (Nb <10g/l)
- Acid temperature averaged 15.9 °C and ranged from 14.9 °C to 17.0 °C during etching.
- Wall thickness reduction of 119 micron on average, but wall thickness and frequency measurements indicate up to a factor of two more reduction near the beam pipes (high E) than at the shell (high B).
- Plans for a more uniform acid distribution in the future.

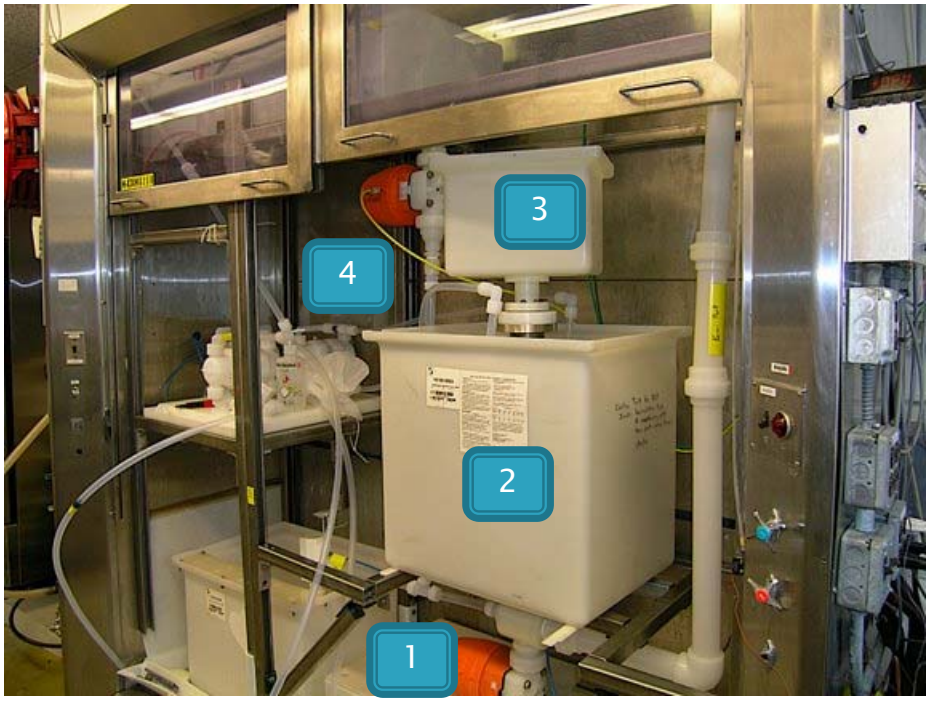

1. Acid fill valve (acid fills through vacuum or power port)
2. Chilled water tank (controls acid temp during etch)
3. Acid overflow bucket (cavity completely filled with acid)
4. Closed loop acid circulation during etching
   - Pump from overflow bucket into both beam pipes.

High Pressure Rinse of SSR1-01 at the ANL Class 10 clean area in the G150 facility

- Long wand: nozzle at end with 6 ultra-pure water jets, two each at +45°, 90°, and -45° to wand axis.
- Wand rapidly rotates about its axis and travels along its axis (into or out of the cavity) at ~ 3 cm/min.
- In order for a jet to spray directly on all interior surfaces, including ports and beam pipes, orientation changed 6 times with HPR lasting ~20 minutes at each orientation.
- Cavity left in a good orientation for drainage (vacuum port up) and left to dry in Class 10 area overnight.
- Flanges blanked off and sent to the Class 10 clean room at MP9 at Fermilab

SSR1-01 in VTS – High Gradient tests of bare cavity

- Fermilab's Vertical Test Stand (VTS): a liquid helium Dewar designed to test 9-cell ILC cavities.
- Fixed length power coupler antenna with $Q_{ext} = 5.9 \times 10^{8}$ at one beam pipe flange. Fixed length transmitted power antenna with $Q_{ext} = 3.5 \times 10^{10}$ at other beam pipe flange.
- 325 MHz power supply: 200 W solid state.
- Three tests in VTS for SSR1-01: Test 1 in 2/08, Test 2 in 3/08 and Test 3 in 7/08.
- For Tests 1 and 2, the VTS had no cavity vacuum system. Cavity evacuated and sealed at 2×10^{-6} Torr (Test 1) and 1.2×10^{-7} Torr (Test 2).
- For Test 3, the VTS cavity vacuum system allowed ~8×10^{-8} Torr at the cavity. Also, a 2-day 120 °C vacuum bake of the cavity preceded Test 3.

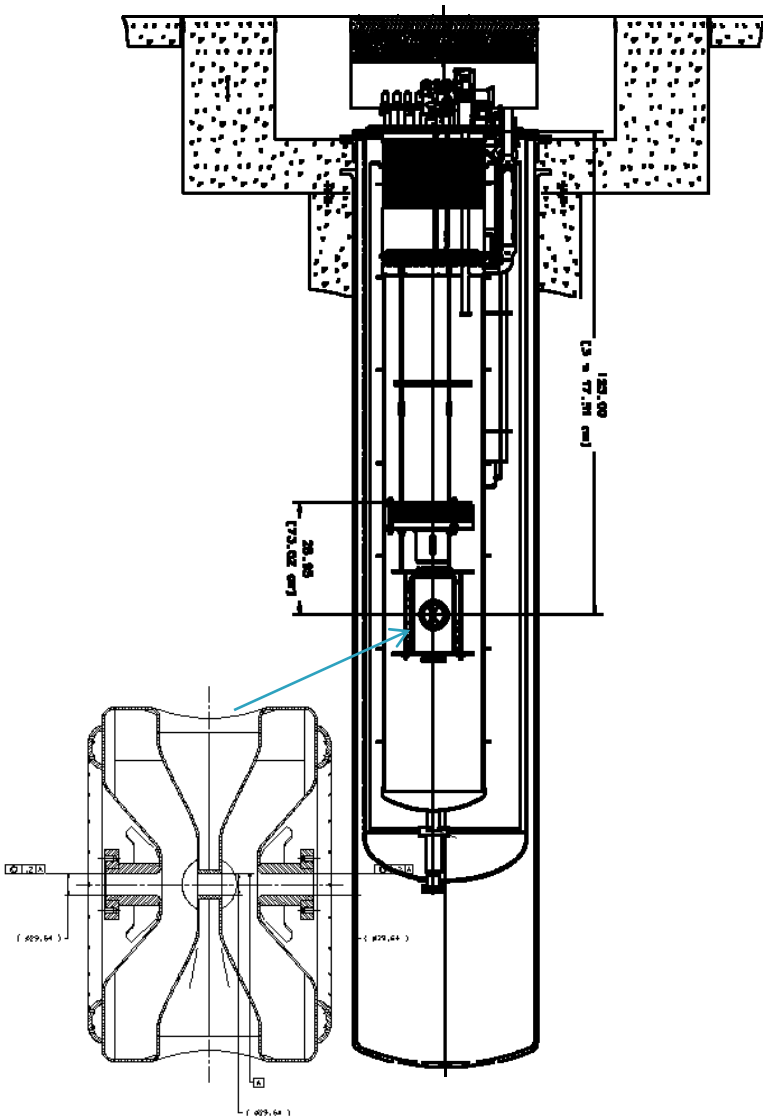

High Gradient tests of bare SSR1-01

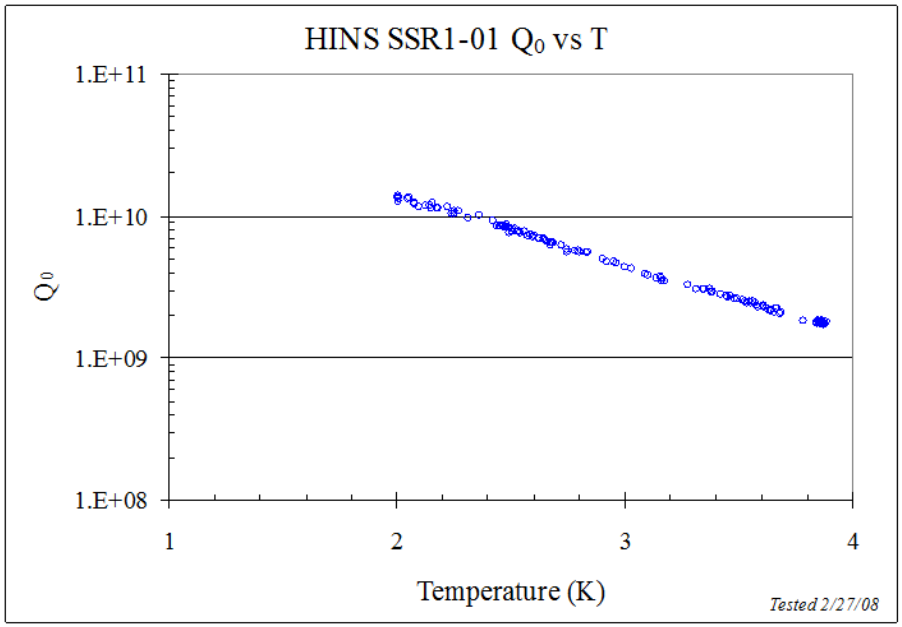

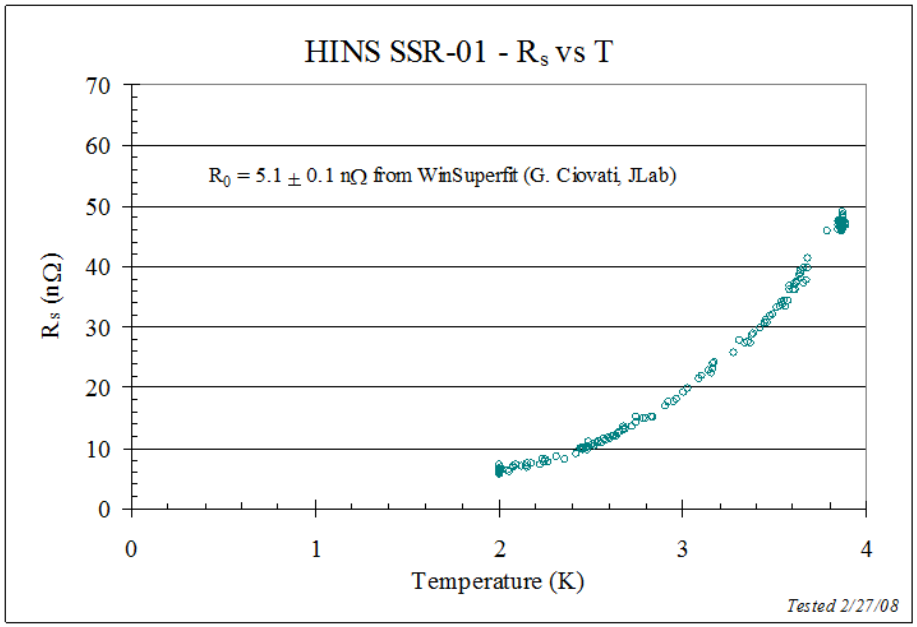

- During Test 1, Q_0 was measured as a function of temperature, T, as T was lowered from 4 K to 2 K at E_{acc} = 2 MV/m.
- This data was used to obtain the surface resistance, $R_S(T) = R_0 + R_{BCS}(T)$, and a fit residual resistance of R_0 = 5.1 nΩ.
- The reduction of helium bath pressure with T was used to map the pressure dependence of the cavity's resonant frequency.

High Gradient tests of bare SSR1-01

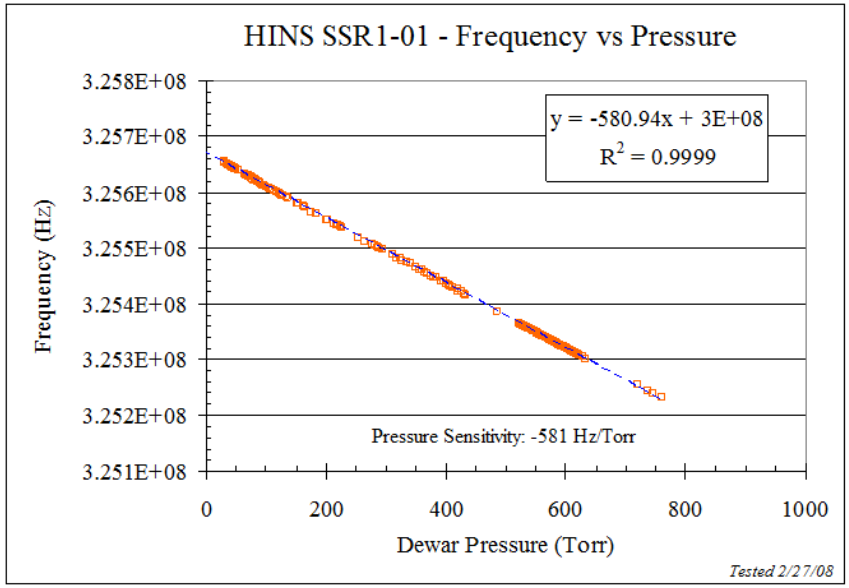

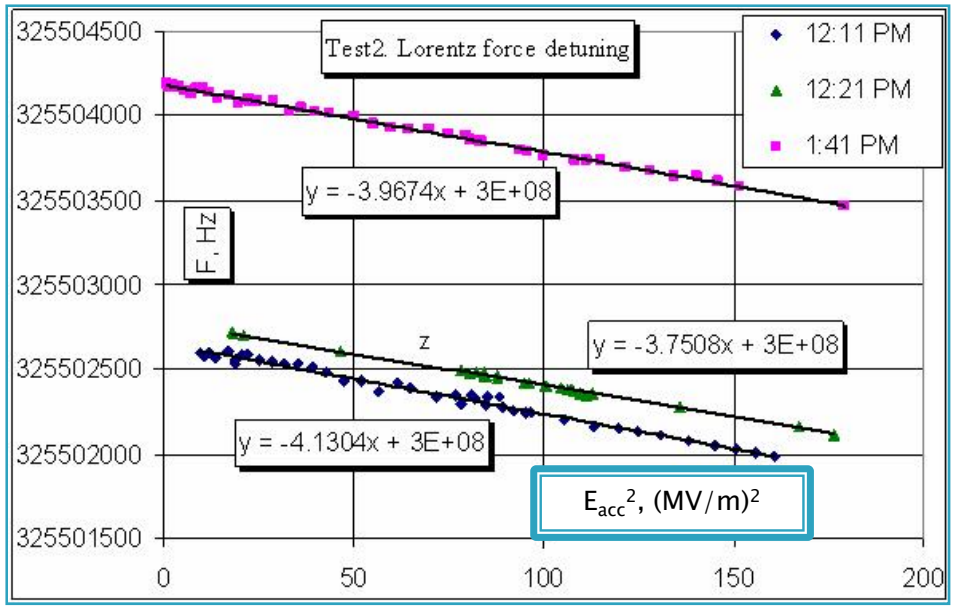

- The measured variation of resonant frequency, F, with Dewar pressure agrees quite well with the MWS-ANSYS simulation of -630 Hz/Torr for the bare cavity. Note that the simulation predicts a much smaller dependence of -30 Hz/Torr when the helium vessel is attached.
- The Lorentz force detuning coefficient was more accurately measured in Test 2 when higher accelerating fields were achieved. Within each of the three scans, the frequency was corrected for pressure variations. The measurements agree much better with the simulation's prediction for the cavity with helium vessel, -3.8 Hz/(MV/m)^2, than for the bare cavity, -13.4 Hz/(MV/m)^2. This is not yet understood.

High Gradient Tests of bare SSR1-01

- Test 1 ended when E_{acc} could not be processed through a multipacting barrier at 6 MV/m.
  - Cernox RTD temperature monitors mounted on the shell indicated that multipacting was at the bottom of the cavity.
  - X-ray detectors mounted within the helium bath indicated that some electrons from the multipacting migrated to the accelerating gap.
- After Test 1, the cavity vacuum had degraded by 1 to 2 orders of magnitude more than expected if it were just sitting on the shelf. An RGA showed hydrogen and water, but no helium. We worried about condensates forming during cooldown and multipacting and started Test 2 with a better initial vacuum (1.2×10^{-7} Torr .vs. 2×10^{-6} Torr).
- In Test 2, E_{acc} reached 13.5 MV/m, but after the initial processing, the cavity still fell into multipacting barriers near the accelerating gradient of 10 MV/m when raising the field. The vacuum degradation was again large.
- Test 3 started after a 2-day, 120 °C vacuum bake of the cavity and using the new VTS vacuum system (~8×10^{-8} Torr at the cavity).
- Q_0 .vs. E_{acc} scans from the three tests are shown on the next slide.

High Gradient tests of bare SSR1-01

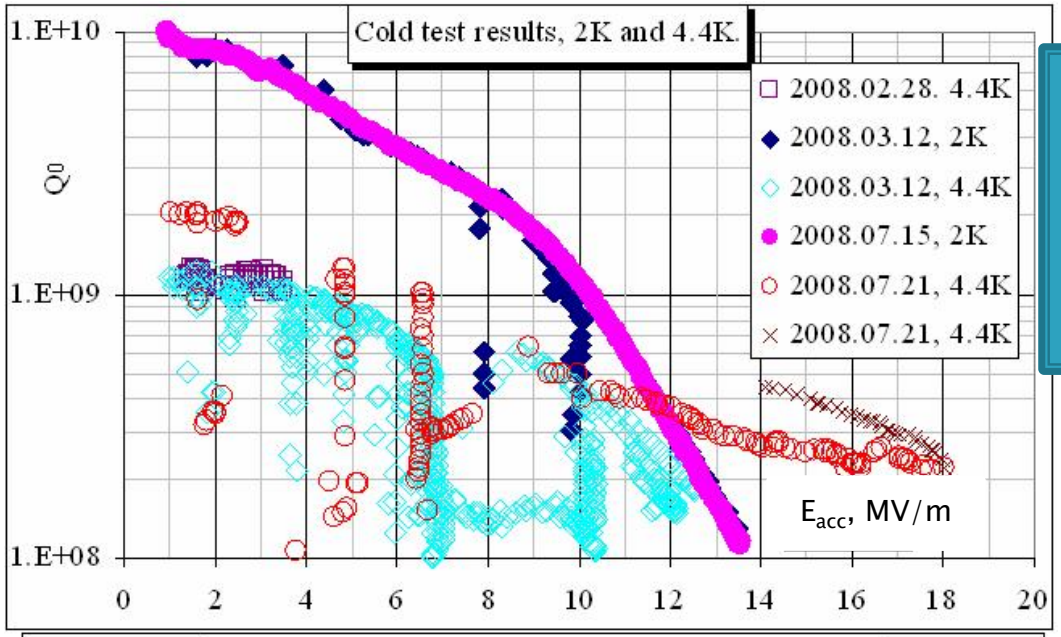

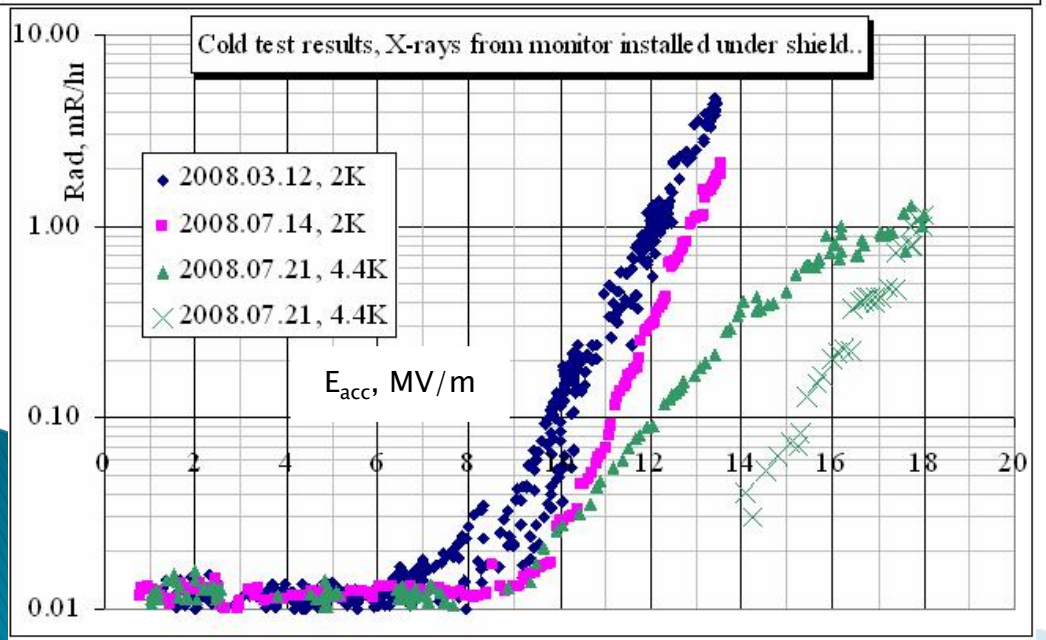

- Limit of scan (maximum E_{acc})

Test 1 Multipacting
Test 2 Power limited – field emission
Test 2 Thermal quench
Test 3 Power limited – field emission
Test 3 Forward scan not yet limited
Test 3 n/a (backward scan)

- In Test 3, the 2K scan looked similar to Test 2, with the important exception that, after the initial processing, the field could be raised without falling into multipacting barriers near 10 MV/m.
- After the 2K scan, a helium leak at the RF feed-through for the power coupler kept E_{acc} below 20 kV/m, but after warming to room temperature and cooling back down, the leak temporarily allowed processing field emitters to reach 18 MV/m. X-ray intensity fell and Q_0 increased markedly after the helium processing. The leak increased and ended Test 3.