# TIMING AND LLRF SYSTEM OF JAPANESE XFEL TO REALIZE FEMTO-SECOND STABILITY

Yuji Otake[A)], Takashi Ohshima[A)], Naoyasu Hosoda[A)], Hirokazu Maesaka[A)], Toru Fukui [A)], Toru Ohata [B)] Mituru Musya[C)], Kenji Tamasaku [A)], Masanobu Kitamura [A)], Kazuhiro Imai[D)], Motonobu Kourogi [D)], Tumoru Shintake [A)]
A) RIKEN, XFEL Joint Project /SPring-8
1-1-1 Kouto, Sayo-cho, Sayo-gun, Hyogo, 679-5148, Japan
B) JASRI, XFEL Joint Project /SPring-8
1-1-1 Kouto, Sayo-cho, Sayo-gun, Hyogo, 679-5198, Japan
C) Institute of Laser Science, Univ. of Electro-communications
1-5-1 Chofugaoka, Chofu-shi, Tokyo, 182-8585, Japan
D)Optical Comb Inc.
4259-3 Nagatuda-cho, Midoriku-ku, Yokohama-shi, Kanagawa, 226-8510, Japan

*Abstract*

At SPring-8, the construction of a 5712 MHz linac and undulators for XFEL is in progress. There are mainly three parts of the linac in accordance with requirements of time accuracy. One is a master signal source part. The noise level of this part affects the phase and amplitude jitter of all rf components of the linac. The next is the crest acceleration part of a sinusoidal wave. The other is an off-crest part that corresponds to a beam bunch-compressing part. To generate a stable SASE, a beam energy stability of $10^{-4}$ is required. To obtain this stability, an accuracy of sub-pico-seconds is required in the crest part, and several ten femto-seconds are necessary in the off-crest part. The system based on IQ control technology used in the SCSS prototype accelerator is employed to obtain sub-pico-second accuracy. An optical signal distribution system using an optical comb generator that could realize a several ten femto-second accuracy is also employed. Test results of the above-mentioned systems showed that there is big possibility to realize femto-second time accuracy for the XFEL.

## INTRODUCTION

Having a several ten femto-second pulse width with a several kilo-ampere peak current of an electron beam compressed by a bunch compressor using the magnetic chicane is required for an XFEL electron linac [1,2]. To realize rf acceleration of the linac with sufficient temporal stability of a femto-second region for generating SASE light, the phase and amplitude jitters of the rf instruments, which are caused by noise, must be extremely small, and their phase and amplitude drift must also be very small. Figure 1 shows a schematic drawing of an XFEL machine that is about 700 m long. The linac comprises a thermionic electron gun using a CeB6 single crystal, a velocity-bunching system using 238 MHz, 476 MHz, and 1428MHz (L-band) acceleration cavities, a bunch-compression system using three magnetic chicanes (BC1 to BC3), 2856 MHz accelerator guides, and 5712 MHz acceleration guides with a high-gradient electric field of 37 MV/m [2]. The requirements for rf stability to realize

Table 1: Tolerance of the phase stability of each cavity.

| Cavity | ΔV/V(%rms) | Δϕ (deg. rms) | Δt (ps rms) |
|---|---|---|---|
| 238 MHz SHB | ± 0.01 | ± 0.01 | ± 0.12 |
| 476 MHz Booster | ± 0.01 | ± 0.02 | ± 0.12 |
| L-band Cor. Cavity | ± 0.03 | ± 0.06 | ± 0.12 |
| L-band APS Cavity | ± 0.01 | ± 0.06 | ± 0.12 |
| C-band Cor. Cavity | ± 0.1 | ± 0.06 | ± 0.049 |
| S-band Accelerator | ± 0.01 | ± 0.1 | ± 0.097 |
| 24 C-band Accelerator (up-stream) | ± 0.01 | ± 0.2 | ± 0.097 |
| 104 C-band Accelerator (Down-stream) | ± 0.01 | ± 0.5 | ± 0.24 |

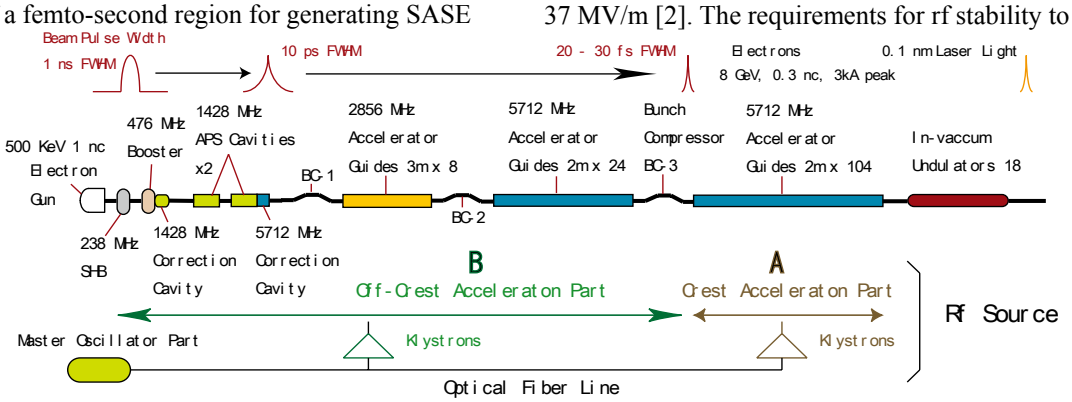


Figure1: The 8 GeV accelerator and undulators for XFEL.

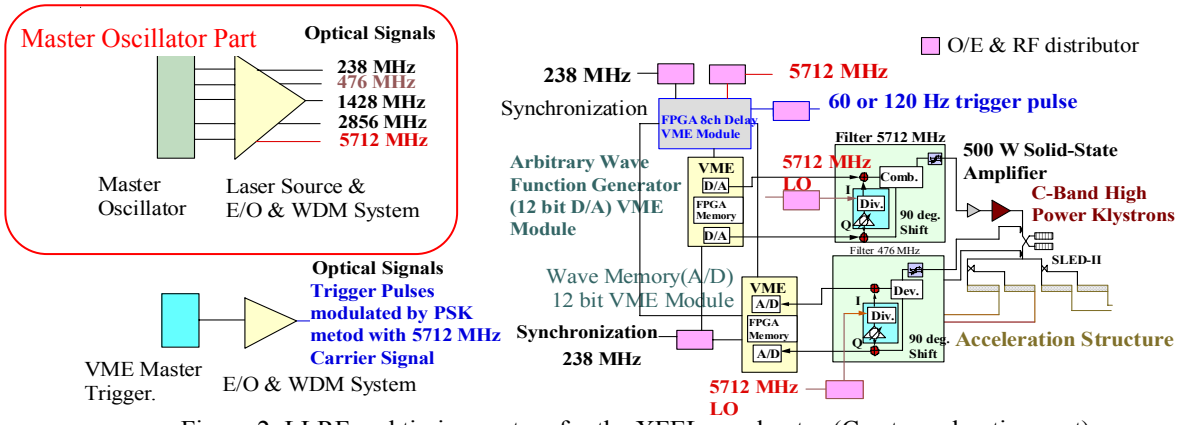


Figure 2: LLRF and timing system for the XFEL accelerator (Crest acceleration part).

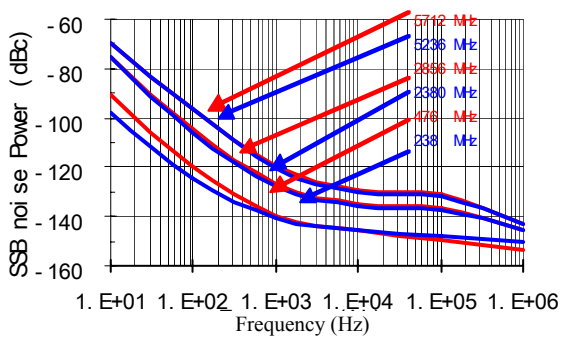


Figure 3:SSB noise power spectrum of the master oscillator.

the several ten femto-second beam of the XFEL linac are mainly categorized in three parts. One is a signal source part. The noise level of this part has a strong effect on the stability of the whole XFEL system. The next, shown in part A of Fig. 1, is a timing and rf control system belonging to a crest acceleration part of the 5712 MHz accelerator. This part mainly uses electrical equipment to control the rf phase and the amplitude. The requirement for acceleration voltage stability of this part is about $10^{-4}$ [3]. A voltage stability of $10^{-4}$ corresponds to a phase for 1 deg. (500fs) at 5712 MHz. The feasibility of the electrical rf phase and the amplitude control system was proved in such a system of the SCSS prototype accelerator. The other part B, displayed in Fig. 1, is an off-crest acceleration part, such as a velocity-bunching part of an electron beam in the injector of the linac, and the bunch-length compressing section using the magnetic chicane. In the case of the magnetic chicane, the beam pulse is compressed from a width of several ten pico-seconds to several ten femto-seconds by chirping the beam energy within its pulse width by a tilted electric field strength in the accelerator guide before the chicane. The energy gain at this part is sensitive to the jitters of the rf phase and the amplitude, because the time derivative of the acceleration voltage is large. Therefore, the time jitter of the low-level rf (LLRF) and timing instruments before the chicane part should be less than several ten femto-seconds, because of its compressed beam pulse width [4]. Table 1 [3] shows a summary of the time stability requirements for the individual acceleration cavities. [3] To realize the time accuracy of the crest acceleration part shown in the table 1, we developed electrical rf phase and amplitude control instruments. To obtain a more precise time accuracy than that of the electrical instruments for the off-crest part, and low-loss rf and timing signal transmission to drive the klystrons for the 700 m long accelerator and undulators, laser communication technology using an optical fiber cable is employed. This paper describes a planed LLRF and a timing system for our XFEL machine, such as the crest and off-crest acceleration parts, as mentioned above, and the development status of devices to compose these systems.

## LLRF AND TIMMING SYSTEM FOR XFEL MACHINE

### *Master Oscillator Part*

The planned LLRF and timing system for the XFEL machine is shown in Fig. 2. The master oscillator part comprises a low-noise rf source, a laser source and a laser light distribution system. The details of the laser source and the system are described in the following section. The signal source generates 238, 476, 1428, 2856, and 5712 MHz signals. The noises of the signals cause time jitters of electron beams. Therefore, the noise must be low. We developed this master oscillator when we built the SCSS prototype accelerator [5]. The reference time base of the oscillator has a $10^{-11}$ frequency stability. The SSB noise of 5712 MHz, as shown in Fig. 3, is -140 dBc/Hz at an offset frequency of 1 MHz. To estimate the time jitter effect of the output signal of the master oscillator, the noise amplitude spectrum (Fig. 3) of the oscillator was integrated form 1 Hz to 10 MHz by a method described in reference [5]. The calculation result showed that the amplitude variation was about 0.01%.

### *System with Electrical Circuits to Control Rf and Timing in the Crest Acceleration Part*

The low-level rf system of the crest acceleration part around the high-power klystrons (5712 MHz 50 MW) is planned as shown in Fig. 2. The feasibility of the system was confirmed in the SCSS prototype accelerator [5.6]. This part mainly consists of electronic rf instruments. CW signals of 238 MHz and 5712 MHz for acceleration are provided by the master oscillator, and are transmitted to the rf components through phase-stabilized optical fiber

cables having a temperature coefficient with an optical length of 2 ppm/K. To drive the klystrons, the signal should be modulated to make a 2 µs pulsed rf, and rf phase and amplitude control to the signals is necessary. This signal control is achieved with an IQ-modulator and a VME-D/A module. The output of the IQ-modulator is applied to a 500 W solid state amplifier to drive the klystron. The phase and amplitude information of the output rf signals form the klystrons and the accelerator guides are monitored with IQ-demodulators and an VME-A/D modules though 60 dB rf waveguide directional couplers. Trigger pulses to activate the instruments, such as a klystron modulator and a VME AD-module for taking the data of the beam monitors, are transmitted from a VME master trigger module through an optical fiber. The pulses are inputted into VME trigger delay modules that synchronize it to the 5712 MHz signal generated by the master oscillator.

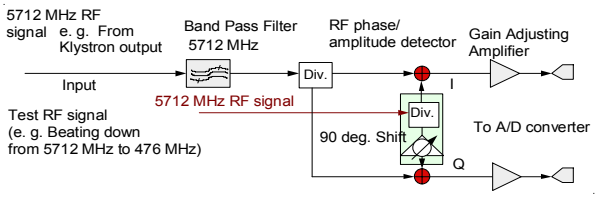


Figure 4: Block diagram of the IQ-demodulator.

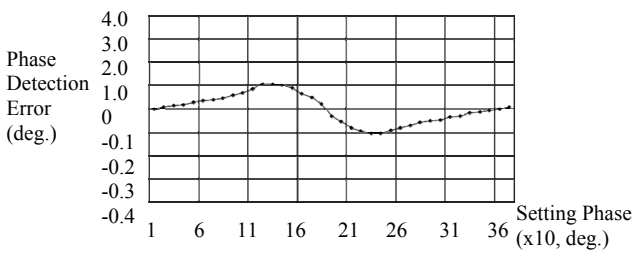


Figure 5: The 5712 MHz phase detection error of the IQ-demodulator. The detection error is within +/- 1 deg.

## *Rf and Timing control Components in the Crest Acceleration Part*

There are four main components to control the rf phase, the rf amplitude and the timing in the crest part [5,6]. One is the 5712 MHz IQ-demodulator shown in Fig. 4. The phase-detection error of the demodulator, as shown in Fig. 5, is +/- 1 deg (about 900 fs), over the whole detection range form 0 deg. to 360 deg.. Next is the 5712MHz IQ modulator, which almost has the same phase setting accuracy of +/- 1 deg. as that of the demodulator. The other instrument is the VME trigger delay module, as shown in Fig. 6. The circuit of the module comprises a FPGA having 8 counters with 24 bits driven by the 238 MHz rf signal. The output pulses of the FPGA are resynchronized by fast flip/flops working by the 5712 MHz signal. Measurements of the jitters to evaluate the module were carried out. Figure 7 shows that the result of a time jitter measurement between the 5712 MHz signal and the module output pulse (LVPECL) is about 620 fs. The last instruments are the 12-bit VME AD and DA modules driven by a 238 MHz rf signal [7]. The D/A has functions that produce a pulse with an arbitrary wave form, such as 2 µs in width. The A/D module is like an oscilloscope without a display to digitize an arbitrary wave form. A dynamic range devoid of noise in the A/D and D/A modules is about 11 bits (5 x $10^{-4}$ V resolution).

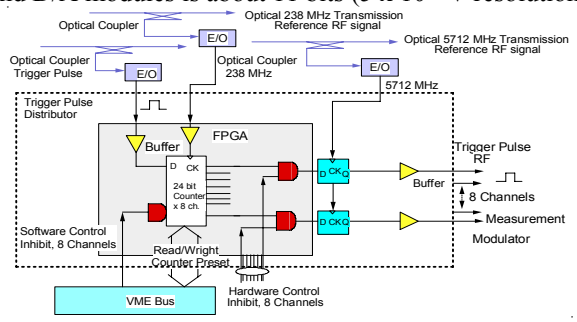


Figure 6: Block diagram of the VME trigger module

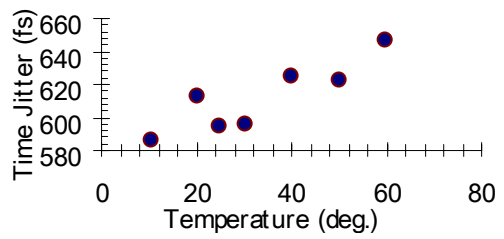


Figure 7: Measurement result of the time jitters (less than 700 fs) of the VME trigger delay module.

## *Optical system to Control Rf and Timing in Off-Crest Acceleration Part*

To ensure a time accuracy of less than several ten femto-seconds for the off-crest acceleration part, an optical fibre and laser system is a good choice to not deteriorate the timing accuracy. To construct an XFEL optical LLRF and timing system, a laser with a wavelength of 1550 nm was employed, because of the telecommunication system. There are many 1550 nm devices available in the commercial market. Therefore, these components are not very expensive. This fact guarantees the stability and maintenancebility of the system. The optical LLRF and timing system was designed as shown in Fig. 8, and comprises a 1550 nm laser source using a DFB laser diode in which light is locked to an acetylene absorption spectrum. To make optical 2856 MHz and 5712 MHz rf signals and an optical timing pulse, we consider two methods, which we will choose later. One is an optical comb generator. Next is a Mach-Zehnder interferometer. Both are connected to the master oscillator for sinusoidal wave or comb pulse modulation. After modulating the laser light, a wavelength division multiplex (WDM) communication system is connected. The WDM system can merge the optical signals modulated by a 238 MHz, 2856 MHz, and 5712 MHz rfs, timing pulses, and the optical comb pulses. The merged optical signals are transmitted through long optical fiber cables along the 800 m XFEL building. Optical fiber usually has a large temperature coefficient of its optical length. Even though, phase-stabilized optical fiber, having a thermal optical length coefficient of 2 ppm/K, is used for signal transmission, the optical length of the fiber

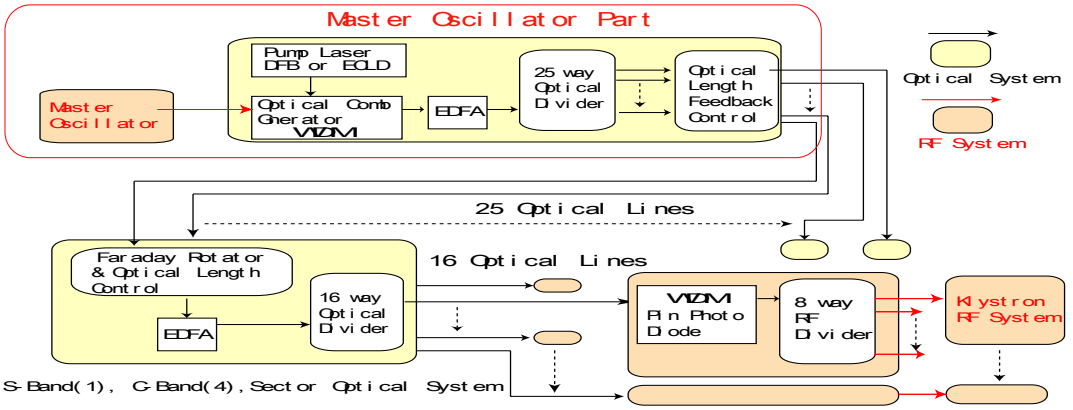


Figure 8: Optical LLRF and timing system for the XFEL machine (including the off-crest acceleration part). Although the instrument configuration around the klystron of this part is almost the same as the off-crest part, the details of the instruments and the requirement around the klystron are different from that of the crest part.

moves 1.6 μm/K for a length of 800m. This values corresponds to a phase shift of about 1 deg./K and 500 fs/K at 5712 MHz; it is not acceptable to employ this method for the X-FEL. To have a more precise time resolution, we use a Michelson Interferometer to measure the optical length of the fiber. An optical length change is eliminated by feedback control using the measurement data of the interferometer. At the end point of the optical fiber, an EDFA (Erbium Doped Fiber Amplifier) is connected to increase its optical power. The output of the optical amplifier is connected to an optical divider. The divider distributes the merged optical signal to each WDM system around the klystron to separate the individual optical rf and the timing signals. Each optical signal is inputed into O/E modules with low noise to convert the laser light to electrical rf signals. The rf signals are distributed to drive the klystrons.

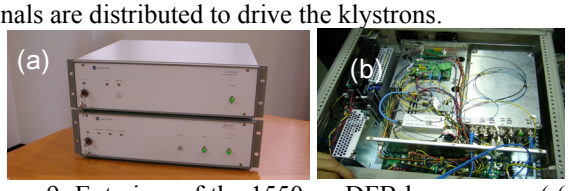


Figure 9: Exteriors of the 1550nm DFB laser source ( (a), up side) and the optical comb generator ((a) lower side). (b) is the interior of the optical comb generator.

## *Rf and Timing Control Optical Components in Off-Crest Acceleration Part*

**A**. The exterior of the developed 1550nm laser source is shown in Fig. 9. The source comprises a DFB laser diode, an acetylene cell, and a frequency feedback control circuit. The frequency stability is almost $10^{-11}$ in a frequency region below 10 Hz. **B**. The optical comb generator [8] was built as shown in Fig. 9. A generator having an electro-optic (E/O, LN) crystal is inserted into an optical Fabriot-Periot cavity. The instrument generates an optical pulse train having about a 1ps (FWHM, rms) width and repetition with a 5712 MHz period, when the 5712 MHz signal generated with the master oscillator is added into the LN crystal. Figures 10-a and b show the output waveform of the optical pulse train and its frequency spectrum envelope. A comparison between the noise spectra at the comb generator output and at the master oscillator output, is shown in Fig. 11. There is slightly increasing noise over the frequency range of 1MHz.

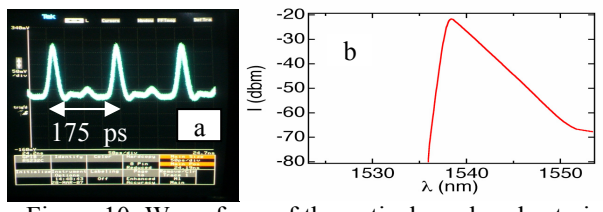


Figure 10: Wave form of the optical comb pulse train and its spectrum envelope.

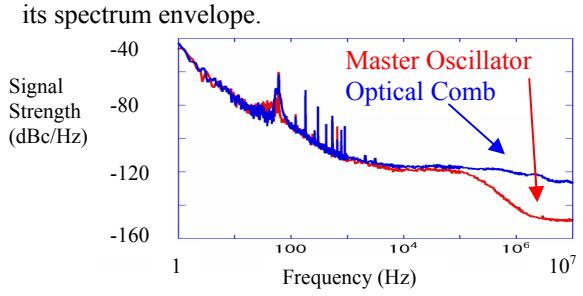


Figure 11: Comparison between the noises of the comb pulses and the master oscillator. The noise of the comb pulses is filtered at the center frequency of 5712 MHz.

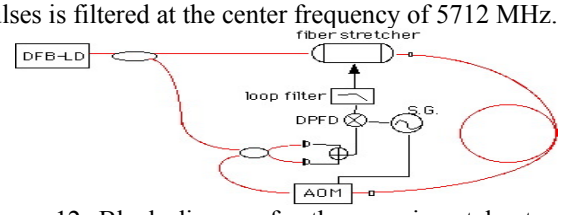


Figure 12: Block diagram for the experimental set up to evaluate the fiber optical length control at SPring-8.

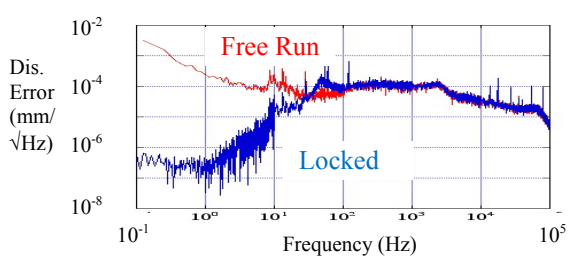


Figure 13: Displacement signal of the optical length control of the fiber with or without feedback control.

C. The block diagram of the fiber optical length control system is shown in Fig. 12. The basic concept of the fiber optical length control is introduced from technology developed for the astronomical radio telescope array of ALMA [9]. The system was tested by using the existing 2 km phase-stabilised optical fiber along the circumference of the SPring-8 ring accelerator. The test system comprised the DFB diode laser source, a fiber stretcher to change the fiber physical length (we can say an optical length), an AOM (Acoustic Optical Modulator) module settled at the fiber end point to modulate a backward optical signal by a 55 MHz signal for distinguishing the forward light and the backward light reflected with a Faraday mirror, a phase detector to measure the fiber displacement and a displacement feedback circuit to control the fiber stretcher. The displacement signal outputted from the feedback circuit is proportional to the filber optical length change (shown in Fig. 13). It is apparent that the optical length control for the fiber worked well, and decreased the displacement to less than several micron-meters of its optical length in a frequency range of under 50 Hz.

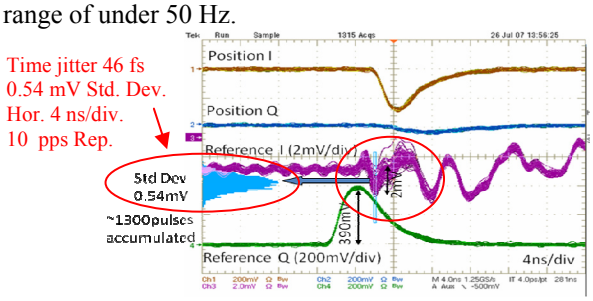


Figure 14: Beam arrival time jitter measured with the BPM intensity detection cavity. The Std. Dev. of 0.54mV corresponds to 46 fs jitter (rms, 1300 pulses accumulated).

## TIME ACCURACY IN ELECTRICAL LLRF AND TIMING SYSTEM

The time jitters of the LLRF and timing system for the crest acceleration part were confirmed in the SCSS prototype accelerator. The time jitter between the acceleration rf signal and a beam-induced field in the 4760 MHz intensity detection cavity of a BPM (Beam Position Monitor) was measured by experiments using the IQ demodulator of the LLRF system in the prototype accelerator. This 4760 MHz frequency cavity was specially designed to prevent any effect of the dark current generated with the 57122 MHz accelerator guides.. The 4760 MHz frequency time reference signal was made by mixing the 5712 MHz and 925 MHz (238 MHz x 4) signals by using the heterodyne method. The result of time jitter measurement, as shown in Fig. 14, was 46 fs.

## SUMMARY

The basic design of the LLRF and timing system for the XFEL machine has been finished. The rf components for the crest acceleration part has been developed. These components satisfy our requirement of the sub-pico second time accuracy, such as the phase detection error of the IQ demodulator, shown in Fig. 5. The system performance of the crest acceleration part satisfying our requirement was proved in experiments using the SCSS prototype accelerator. The optical devices for the off-crest part, such as the frequency-stabilized laser source, the optical comb generator, and fiber optical length stabilization, are still under development. Some of the development results showed good performance to satisfy the several ten femto-second accuracy. For example, the allan variance of the laser source is $10^{-11}$. The SSB noise level of the optical comb generator (Fig. 11) almost satisfies our requirement. The control accuracy of the fiber optical length was less than several micron meters for a 2 km length of the phase-stabilized optical fiber at SPring-8. The measurement result of the 46 fs time jitter between the beam and the acceleration rf signal is consistent with a calculation result using a R56 value of 20 mm and a beam energy jitter value of about 0.06 % (short term) measured in the SCSS prototype accelerator. This fact shows that our developed components and system almost satisfy the required time accuracy and stability for the XFEL machine shown in table 1. However, some of the optical components are under development, and some of the electrical LLRF and timing components still do not have sufficient performance to realize the requirement of the off-crest acceleration part. (We do not especially have an electrical rf phase and amplitude detection method equipped with the femto-seconds accuracy.) Therefore, we must continue developments to realize a stable XFEL machine.

We thank members of the XFEL group for their support to our study and development.

## REFERENCES

[1] SCSS X-FEL Conceptual Design Report, 2005.
[2] T. Shintake et al., FIRST LASING AT SCSS, Proc. of the 28th FEL Conf., http://www.bessy.de /fel2006/proceedings/HTML/AUTHOR.HTM, 2006.
[3] Dr. H. Tanaka, private communications.
[4] M .Cohlus et al., BUNCH COMPRESSION STABILITY DEPENDENCE ON RF PARAME-TERS, Proc. of The 27th FEL conf., USA, 2005.
[5] Y. Otake et al., Sub-pico-second trigger system for the SCSS prototype accelerator, Proc. of the 28th FEL Conf., http://www.bessy.de/fel2006/proceedings /HTML/AUTHOR.HTM, 2006.
[6] Y. Otake et al. SCSS rf control toward 5712 MHz phase accuracy of one degree. Proc. of APCA conf., India, 2007.
[7] T. Fukui et al., A Development of High-Speed A/D D/A VME Boards for a Low Level RF System of SCSS, Proc. of the 9th ICALEPCS 2005.
[8] M. Kourogi et al., Advances in Electro-Optic Modulator based Frequency Combs, Proc. of LEOS2005 Summer Topical Meeting, WB2.1 ,2005.
[9] M. Musha et. al., Robust and precise length stabilization of a 25-km long optical fiber using an optical interferometric method with a digital phase-frequency discriminator, Appl. Phys. B, Springer-verlag, 2006.