PHOTON DIAGNOSTIC STATION FOR TAC IR-FEL TEST FACILITY*

I. Tapan#, Uludag Universitesi, Bursa, 16059, Turkey

Abstract

According to the Turkic Accelerator Center (TAC) project, the first linac-based infrared free electron laser facility (IR-FEL) will be constructed. The IR-FEL photons generated by two undulators in the wavelength region of 1 to 200 microns will be delivered to eight user laboratories. Photon diagnostic station will be located in the experimental hall to measure the properties of the photon beam. In this work, the performance of the designed IR-FEL photon diagnostic station for the TAC test facility has been discussed.

INTRODUCTION

After ten years of successful work, the Turkic Accelerator Center (TAC) was proposed as a regional facility for accelerator based fundamental and applied research [1]. The TAC project has been started in 2006 with the financial support of State Planning Organization (DPT). The work has been ongoing by ten Turkish Universities collaboration. As a first step of the project, a linac-based infrared free electron laser will be constructed as a TAC test facility by the end of 2010. The facility will be an oscillator FEL that provides the laser beams in mid and far infrared region. A schematic view of the oscillator FEL is given in Figure 1. It includes electron source, two RF modules to get 15 to 40 MeV electron beam and two undulators to obtain laser beam in the wavelength region of 1 to 200 microns.

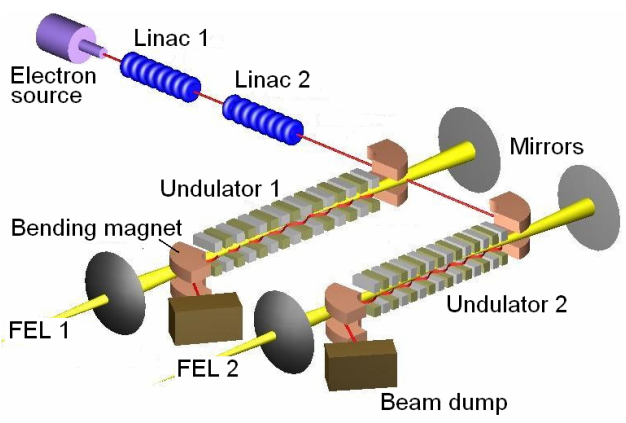

Figure 1: The schematic view of the TAC IR-FEL test laboratory.

The TAC IR-FEL test facility will be constructed to produce tuneable, coherent light with high flux which is around 10^{15} photons/s.eV and high brightness. The photon beam diagnostic will be essential tool for this availability.

*Work supported by Turkish State Planning Organization (DPT)
#on behalf of the TAC Collaboration, ilhan@uludag.edu.tr

PHOTON DIAGNOSTIC STATION

The optical beam diagnostic station has been designed to properly characterize laser beam for user experiments and to diagnose beam properties for tuning of the undulators (undulator 1 and undulator 2). The diagnostic system will be compatible with tuning range from 1 to 200 microns.

The IR-FEL photons generated by two undulators will be transported to the experimental hall through the respective two photon beam lines by using reflective optics. The high reflectivity IR mirrors coated with Al, Au, Ag will be use to transport and focus the beam with other optical lenses. The diagnostic station will be located in the experimental hall. Both FEL beam lines will be merged on the diagnostic table and delivered to eight user laboratories after attenuation. All the optical components and devices will be placed on a granite table in the station (Fig. 2). Mirrors, crystal optics and beam splitters will be employed on the table to guide the photon beams to separate spectrometer and different kind of detectors.

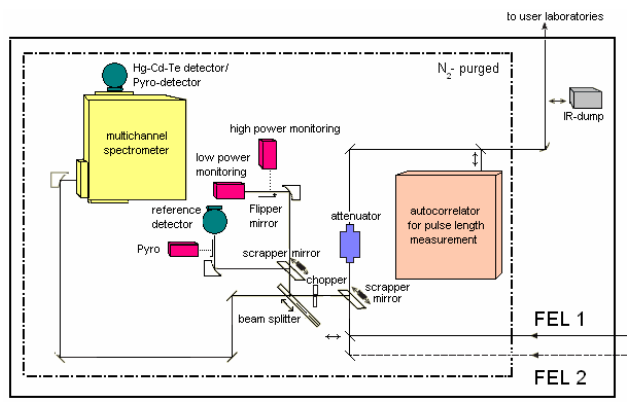

Figure 2: The optical components and devices on the diagnostic table.

As an example, we have chosen IR-FEL diagnostic station at the ELBE radiation source in Dresden. The TAC IR-FEL diagnostic table has been designed similar to that of ELBE [2]. We will get technical help during installation and operation from them.

In order to characterize the optical micro pulse duration, a non-collinear background free autocorrelator will be used. By using a CdTe single-crystal for second harmonic generation same as in ELBE IR-FEL diagnostic system, a broad wavelength coverage will be obtained. A Czerny-Turner type spectrometer which contains a turret with three different gratings will be used for the spectrum measurements. A long wavelength MCT (HgCdTe) detector and a Pyro detector will be used in the diagnostic system for gain and loss measurements with higher

sensitivity in the whole range of the FEL spectrum. The average FEL power which is around a few Watt will be reduced by thin metal attenuators for the user.

ACKNOWLEDGMENT

This work is supported by Turkish State Planning Organization (DPT) under the grant DPT2006K-120470.

REFERENCES

[1] S. Sultansoy et al., "The Status of Turkic Accelerator Complex Proposal", Proceedings of PAC 05, p. 449.

[2] W. Seidel et al., "Remote Controlled IR- Diagnostic Station For the FEL at Rossendorf ", Proceedings of FEL 06, p. 341.