THE CERN CONTROL CENTRE: SETTING STANDARDS FOR THE 21ST CENTURY

D. Manglunki

CERN, Geneva, Switzerland.

INTRODUCTION

In 2003, CERN decided to build a unified control centre to replace four of its control rooms: the "Meyrin Control Room" which controlled the PS complex, the "Prevessin Control Room" (PCR) which controlled the SPS and until 2000 LEP, the Technical Control Room (TCR), and the Cryogenics Control Room (QCR). After first contemplating a possible implementation next to the "Globe of Science and Innovation", it was decided for budgetary reasons to build the new CERN Control Centre (CCC) on the same location as the PCR. This represented a 50% saving in construction costs as most of the technical infrastructure (computer network, water, electricity, ventilation) was already in place, but added stringent time constraints: civil engineering could not begin before the SPS shutdown in November 2004, yet the room had to be ready for the accelerator operations to resume in March 2006. Although this presented a strict construction schedule, it allowed the project to be completely driven by the operational needs of CERN, and not by public relations activities.

ORGANISATION

The management of the project was split into two parts: the civil engineering, under the responsibility of the Technical Services (TS) department, and the users' infrastructure, managed by the Accelerators and Beams (AB) department. Each part established a working group to coordinate its tasks (figure 1). The users' working group (CCC-WG) was composed of engineers from large and small accelerators operations, LHC commissioning, accelerators controls, cryogenics, and technical infrastructure; three of its members, including the chairman, also belonged to the TS coordination working group, ensuring a close collaboration. The CCC-WG hired two companies, GTD[1], and CCD[2] whose directors co-wrote the ISO norm for control centres [3], to help designing the control room building, acoustics, lighting and furniture in the best possible ergonomic way.

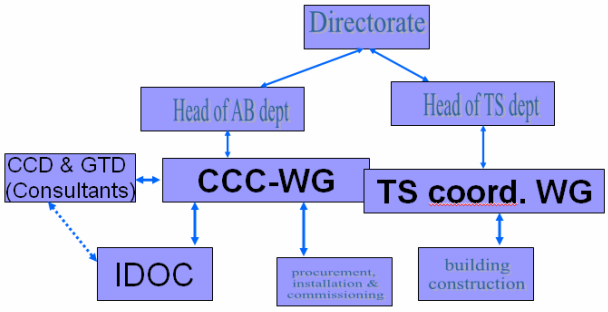

Figure 1: Organisation of the project management

It also set up an Inter-Department Operators Committee (IDOC) composed of technicians from the four previous control rooms, so that all of the primary users' opinions were taken into account. Their input was very important considering the new control room would create a culture change by bringing together operating crews from four separate areas, with their various ways of working. Long before the building was ready, the IDOC offered a forum in which the operators of the different facilities could begin working together.

Figure 2: Panoramic view of the control room (Photo J.C.Oliveira)

THE CONTROL ROOM

One of the challenges was to take into account the existing PCR building and to integrate it into the new control room design. It was decided to construct an entirely new building next to the existing one, in order to house the control room, and to transform the old PCR building to house the various services: meeting and conference rooms, reception/secretariat, telecom equipment room, ventilation plant, control servers room, maintenance workshop, kitchen, toilets, showers, lockers, etc… This allowed to optimize the building from scratch for the control room (figure 2), instead of having to fit a control room into an existing building, as is often the case.

The new building

Dimensioning the surface of the control room itself was straightforward: from the estimation of routine (13) and peak (over 60) population of the control room, a area over 600 m^2 was deemed necessary. As the PCR building already has a side of 25 m, we decided to build a square (25x25= 625 m^2) structure next to it. The ceiling height had to be at least twice the standard in order to avoid the "parking effect", an uneasy feeling experienced when working in a large room with a low ceiling. It also allows a more comfortable distribution of the conditioned air, as well as space for the lighting system

An important feature of the room is the total absence of pillars to support the roof slab. Instead, the roof is made of pre-constrained concrete beams. This option, although more costly, is essential to prevent obstacles in the visual communication between operation crews, as well as to allow any possible configuration of the consoles within the room.

An 80 cm high false floor provides the space for three well-separated sets of networks:

1. Mains power, split between normal and uninterruptible.
2. Controls (ethernet, video, intercom and telephone lines)
3. Security signals between access consoles and PLCs in the servers room.

Acoustics

In order to provide a pleasant work environment even during activity peaks, the reverberation time has to be less than 400ms. To that effect, all surfaces are made of acoustically damping material, whenever possible: the ceiling tiles are covered with a rock wool layer, the false floor tiles are coated with a highly resistant carpet, and the walls are garnished by acoustic panels of variable thicknesses to break resonant conditions. For similar reasons, the windows – offering an agreeable view over the Jura mountains – are split into 8 units.

The lighting system

Apart from the natural light supplied by the windows, the lighting system consists of two components:

1. From the ceiling hang 81 luminaries, each one comprising two fluorescent 100 Hz tubes. Their light is mostly (80%) directed towards the ceiling, and diffused by it, in order to provide an homogeneous lighting at ground level. Their power is individually tuneable, and collective power settings can be saved according to scenarios (day, night, sunset, etc)
2. On each console, two task lamps provide a user-dependant light. The task lamps are plugged into the uninterruptible power network and also act as security lights in case of a power cut.

Although the only wall equipped with windows is oriented North-West, some sunlight can actually enter the control room around sunset during the summer. Hence, each window can be shaded by a rolling blind, independently controllable by the same software which handles the ceiling lights, and whose settings are also stored in the lighting scenarios.

CONSOLES

In order to provide a unique console design for the four components of the operations crew (figure 3), CCD conducted a careful survey to study their various ways of working, their needs, and their expectations. The resulting design is a desk composed of two 24° sector tables, with an inner radius of 3.6m. The desktop is decorated with marmoleum for comfort of writing. The lower half of the console hosts the workstations' CPUs, easily accessible from the back by opening a panel on hinges. The panel is made of acoustically absorbing material, contributing to the damping of the noises. CCD had proposed three colour schemes, for the console, carpet and walls, and IDOC chose the preferred one, a dominantly blue, with some modifications.

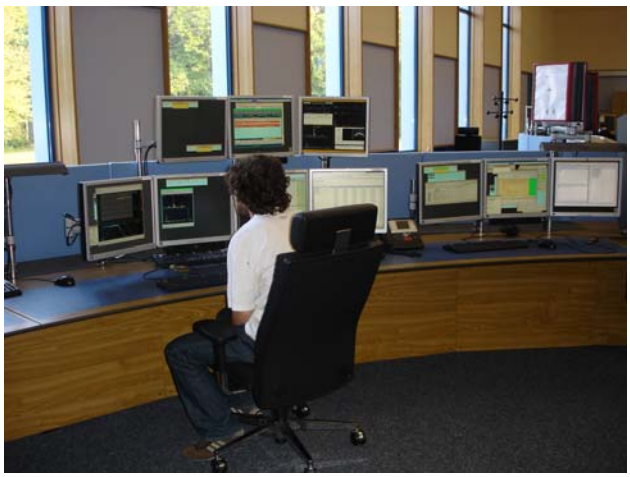

Figure 3: Typical operator desk

Each console offers ten screens (figure 4): two sets of three for controls applications, three for fixed displays and video signals, and one attached to a PC connected to the public network – all other machines being on the technical network. All the CPUs and half of the screens are on the uninterruptible power supply.

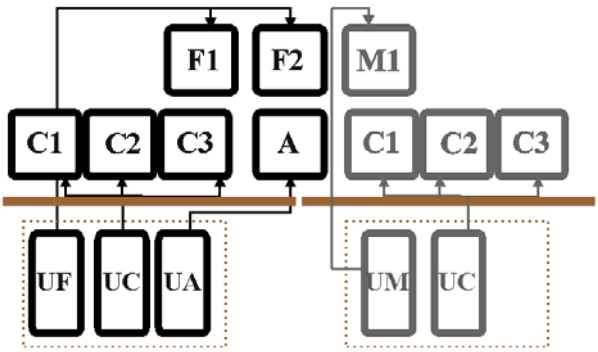

Figure 4: Distribution of screens and computers within the console. UF+F1-2: fixed display and their CPU; UC+C1,3: controls computer with its 3 screens; UA+A: administrative computer, on the public network; UM+M1: media centre with screen split into 4 video signals.

Special cabinets with 19" standard racks, integrated to the consoles, were designed to host the accelerators access systems for which hardwired signals are necessary.

A prototype of the console was built and installed next to the MCR during its last year of operations, in order to get feedback from the operations crew, get rid of some design flaws, and implement modifications before the production of the series. After the first months of CCC operation, three LHC experiments (ALICE, ATLAS and CMS) ordered similar furniture from the same manufacturer [4], soon followed by FermiLab for their LHC@FNAL control room, and by PSI for their new control room "WBGB". ITER has also started to show some interest.

LAYOUT

The distribution of consoles inside the control room turned out to be a hot topic of discussion which eventually got solved by a one-day workshop between IDOC, CCC-WG and CCD. The final layout, seen from the top, resembles the shape of a quadrupolar magnet. The tables are distributed in four islets of about 5 consoles, respectively dedicated to LHC, SPS, PS Complex and Technical Infrastructure (TI). Cryogenics operations consoles are spread between TI and LHC.

In the centre of each islet is a round table hosting 2 computers on the public network, and room for laptops which can connect to the WiFi.

A large oval table sits in the centre of the room, providing a social area for discussions between operators.

Finally, sixteen 46" screens are mounted on the walls to provide information throughout the control room. Twelve such screens were added after the first year of operation.

FIRST TWO YEARS OF OPERATION

The CCC started to be manned as planned on February 1st, 2006, first by TI operators, soon to be followed by the PS complex and SPS crews, who successfully restarted their machines without major problems after an 18 month shutdown. Since then, several milestones have been reached from the CCC: commissioning of Pb ions in the PS [5] and SPS, of TT40 and TT60 [6], of CNGS [7], and partly of the LHC hardware [8], underlining the fact that all of the operations teams for the accelerators and the technical infrastructure now work in a single control room, allowing for a more efficient and collaborative environment.

CONCLUSION

- For the first time at CERN, the control room was built with ergonomics as a first concern, and with the operator at the centre of the project. We believe this was the key element for its success.
- The project would not have met its goal without the invaluable contribution of the consulting companies. Their fees, which amounted to 1.5% of the budget, was money well-spent.
- The design of the CCC has already been copied for other "Accelerator and Large Experimental Physics Control" centres around the world.

ACKNOWLEGDGEMENTS

The author would like to thank the members of the CCC-WG, IDOC, TS coordination working group, and Accelerator and Beams Operations group who contributed to the project.

REFERENCES

[1] http://www.gtd.es/
[2] http://www.ccd.org.uk/
[3] ISO 11064-1 "Ergonomic design of control centres
[4] http://www.erichkeller.ch
[5] D. Manglunki et al, "Ions for LHC: Status of the Injector Chain", Proc. APAC07, Indore, India.
[6] B. Balhan et al, "Beam commissioning of the SPS LSS6 extraction and TT60 for the LHC", Proc. PAC07, Albuquerque, New Mexico, USA.
[7] M. Meddahi et al, "CERN Neutrinos to Gran Sasso (CNGS): results from commissioning", Proc. PAC07, Albuquerque, New Mexico, USA.
[8] L. Evans, "LHC: Construction and commissioning status", Proc. PAC07, Albuquerque, New Mexico, USA.