THE CRYOGENIC CONTROL SYSTEM OF BEPCII

G.Li, K.X.Wang, J.J.Zhao, K.J.Yue, M.H.Dai, Y.L.Huang, B.Jiang, IHEP, China

Abstract

A superconducting cryogenic system has been designed and deployed in Beijing Electron-Positron Collider Upgrade Project (BEPCII). The system consists of a Siemens PLC (S7-PLC) for the compressor control, an Allen Bradley (AB) PLC for the cryogenic equipments, and the Experimental Physics and Industrial Control System (EPICS) that integrates the PLCs. The system fully automates the superconducting cryogenic control with process control, PID control loops, real-time data access and data restore, alarm handler and human machine interface. This paper describes the BEPCII cryogenic control system, data communication between S7-PLC and EPICS Input/Output Controllers (IOCs), and the integration of the flow control, the low level interlock, the AB-PLC, and EPICS.

INTRODUCTION

In order to increase the luminosity of the BEPC [1], the project BEPCII was constructed in the past few years. Three kinds of superconducting devices including RF cavity (SRFC), superconducting solenoid magnet (SSM) and superconducting quadrupole magnet (SCQ) are used in the BEPCII for the first time. The compressor system comprises a main compressor, a refrigerator, a subcooler and transfer lines. Superconducting SRFC consists of two SRFCs, one valve box and one 2000L Dewar. Superconducting magnets are composed of two SCQs, one SSM, three valve boxes and one 1000L Dewar.

Two cryogenic compressor systems were purchased from the vendor-Linde Company, which performs the compressor control through S7-400 PLC, Profibus and WinCC. The control system of superconducting devices was developed by Institute of High Energy Physics (IHEP), using AB-PLCs, ControlNet and VME IOCs.

CONTROL SYSTEM OVERVIEW

The control system of BEPCII is based on EPICS [2] [3], a set of open source software tools, libraries and applications developed collaboratively and used worldwide.

Figure 1 illustrates the structure of the cryogenic control system at IHEP. The cryogenic control system is divided into compressor control and superconducting control according to the front-end devices. The operator interface at the center control room takes care of monitoring and archiving of selected signals, and displays the running status of cryogenic system. The engineering workstations and VEM IOCs in local cryogenic control room can be remotely connected to the PLCs, through Profibus and ControlNet respectively. PLCs in front end are connected to the sensors and actuators directly [4] [5]. The local touch panels are used to show some important information of the PLCs.

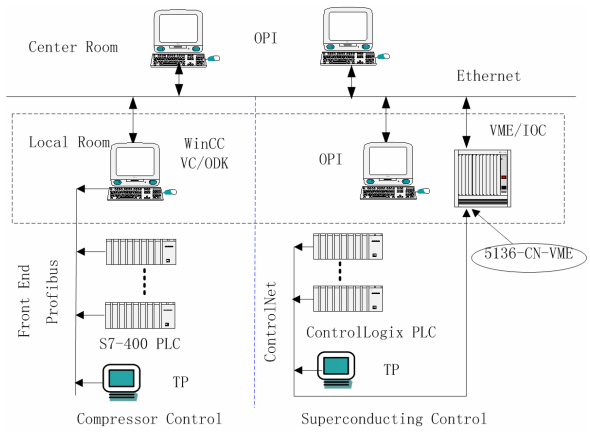

Figure 1: the cryogenic control structure of BEPCII project

COMMUNICATION BETWEEN S7-400 PLC AND EPICS IOC

Cryogenic control of the compressor system is not described in this paper, because it was developed by vendor-Linde Company. But the communication between the WinCC system and EPICS is required to integrate the compressor signals into EPICS.

The open development kit (ODK) is a software package, which provides open C application program interface (C-API). We have developed a data communication program, so that the data of WinCC can be accessed or changed by EPICS via C-API of the ODK. The software architecture shows in Figure 2. An IPC installing WinCC, ODK, Mircrosoft Visual C++ and CA Dynamic-link Library serves as Channel Access Client (CAC) of EPICS. Whereas , a PowerPC processor running IOC database serves as Channel Access Server (CAS) on the VME IOC.

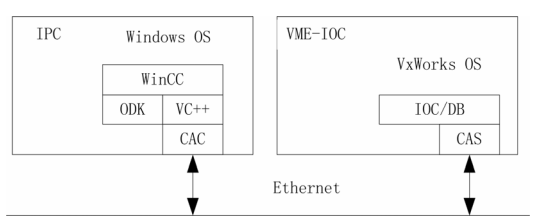

Figure 2: The structure of communication between S7-400 PLC and EPICS IOC

The VC++ program serving the data communication has following functions. Firstly, the connection is established between VC++ and WinCC via C-API of ODK, and the VC++ program reads the real time data of S7-400 PLC in the WinCC database according to the tag name. Secondly, the VC++ program can be linked to IOC database via CA and sends the data to the IOC database. On the other hand, the IOC database can also update the value of S7-400 PLC through the WinCC.

CONTROL SYSTEM OF SUPERCONDUCTING DEVICES

The control system of superconducting devices is implemented via AB-PLCs, which have ControlLogix controllers. The PLCs and IOCs communicate through the ControlNet. The IOCs are MVME5100 PowerPC running EPICS R3.13.8 under VxWorks 5.4 operating system in VME crates.

The cryogenic control system supplies the 4.5 Kelvin liquid helium to the SRFC, the 4.5 Kelvin two-phase helium for SCQ and SSM of the BEPCII. Once the cryogenic system operates, the cryogenic control system is expected to run continuously and steadily. It needs more time, more money to get back stably when cryogenic control system has fault. So it is very important to design the control logic, control PID loop, low level interlock and sequence for this reason.

Design of Control Function

The Cryogenic system has several operational phase including cooldown, normal operation, warmup and quench recovery. During the different operational phase, the different control logic, interlocks and control loops are used to control the actuator, the heater and so on. Figure 3 shows the distribution of the cryogenic control function. All high level control algorithms, control PID loops and automatic sequences reside in IOCs under the EPICS. Only the low level interlocks and device I/O of the pivotal equipments run in PLCs.

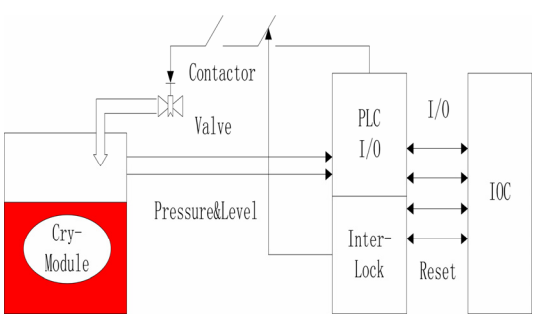

Figure 3: Design of Control Function of Superconducting Devices

The control logic and control loops often need to be modified during the commissioning stage. Generally the loops running on the PLCs must work continuously, even momentary interruptions can not be tolerated, whereas a short interruptions can be tolerated in IOC side. Thus IOC reboot is allowed for maintenance, because the communication between PLCs and IOCs is via the ControlNet, and the ControlLogix will keep the value of all inputs and outputs of PLCs, when the ControlNet communication is broken for a while.

PID Control Loop

To keep the cryogenic system operation best with a fairly constant load, a lot of PID control loops are used in cryogenic control system [6] [7]. Here is the example which shows how to control the level of liquid helium in superconducting cavity (See Figure 4).

The power of the electrical heater is used to compensate the dynamical load of the SRFC. Normally, the output power of the electrical heat is calculated according to the power from the RF system, and the inlet valve feeds the liquid helium into vessels to keep the cavity in superconducting states. Because the resistance of the wires and system errors exist, two PID control loops are designed to keep the balance of the liquid level in vessels.

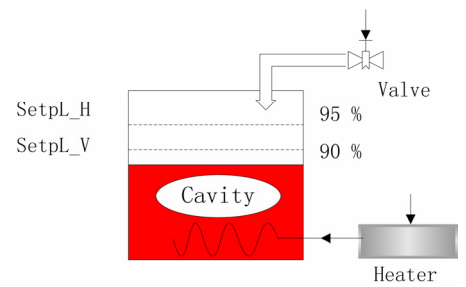

Figure 4: Two PID Control Loops

The output power formula of electrical heaters as follows:

$$PHeater = PState+PRF+PPID$$

where PState stands for static state power of electrical heater; PRF means dynamic load power from RF system, PPID is compensating power of electrical heater. SetpL_H stands for the setpoint value of the level-heater PID control loop, and SetpL_V is the setpoint value of the level-valve PID control loop. By the way, the value of the SetpL_V is much smaller than the value of the SetpL_H.

Interlocks in PLC

In order to protect the key devices, for example the cavity or current leads of superconducting magnets, from damage, a lot of interlock conditions need to be taken into account to force actuators at a safe position. Of course, these interlock programs reside in the PLC, which is independent from the IOC.

All of the interlock actions are performed automatically as soon as one of interlock conditions is available. However, the recovery of the interlock status

must be enabled by the operator. The superconducting cavity is sensible to the pressure in the vessel. So the inlet valve should be closed immediately to cut off the supply of the liquid helium when the liquid level or pressure is high.

Certainly, there are other interlock conditions to be considered as early as possible before construction of the cryogenic control system. For example, the power of level indicators should be shut down, if no liquid is detected in vessels; the power supply of the heaters need to be switched off as soon as a risk of thermal runaway exists.

CONCLUSION

The control system of superconducting systems was designed, constructed and is commissioning. Two-layer control structure is adopted in cryogenic system. The high level control is on the EPICS IOC, where all control algorithms, PID control loops and sequences reside. The low level control is on the PLC, which performs data input output and the important and necessary interlocks. The control system of SSM and SCQ has been improved to fix some problems in design of current leads. The control system of SRFC has been in operation for more than one and a half years without any problem.

The authors wish to express their gratitude to Mr. Matthias Clausen from DESY, who has given them a lot of valuable advice and help. The authors would also like to thank the cryogenic group at IHEP for their skillful work and assistance during the commissioning of the cryogenic control system.

REFERENCES

[1] ZHANG Chuang. Introduction of the Project BEPCII. IMAC05 Beijing. 2005

[2] Kraimer M R. EPICS IOC Application Developer's Guide. ANL/APS Report. 1998. 5-11

[3] ZHAO Ji-Jiu. BEPCII Design Report: Control system. Beijing: Institute of High Energy Physics, CAS. 2002.

[4] XU Feng-Yu. The Cryogenics control system of BEPCII. Institute of Cryogenics and Superconductivity Technology, HIT. 2004.

[5] Matthias C. Review Summary. BEPCⅡ Cryogenic Control Seminar, Beijing 2005

[6] JIN Yi-Hui. Process Control [M]. Beijing: Tsinghua University Press. 1993.

[7] SONG Bo-Sheng. The Program Theory, arithmetic and Tip of PLC [M]. Beijing: China Machine Press. 2005.