The Detector Control System for the electromagnetic calorimeter of the CMS experiment at LHC

P. Milenovic[1,2], A. Brett[1], G. Dissertori[1], G. Leshev[1], T. Punz[1], S. Zelepoukine[1,3], D. Di Calafiori[4], R. Gomez-Reino[5], R. Ofierzynski[5], D. Jovanovic[6,2], J. Puzovic[6,2], F. Cavallari[7], A. Inyakin[8], P. Adzic[2]

1 CMS experiment

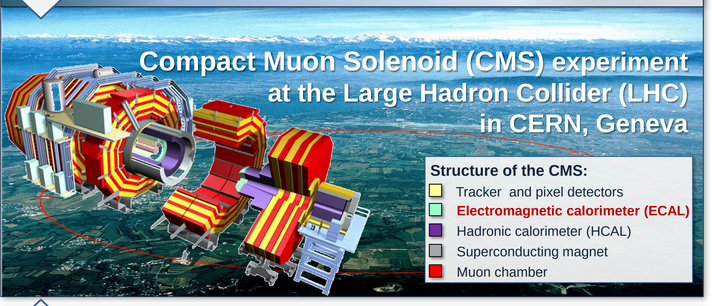

2 ECAL design issues

Physics goal that determines main design requirements:
The discovery of the postulated Higgs boson

ECAL design requirements:

- High energy & angular resolution
- High degree of hermeticity
- Compactness
- Radiation tolerance
- Fast response time

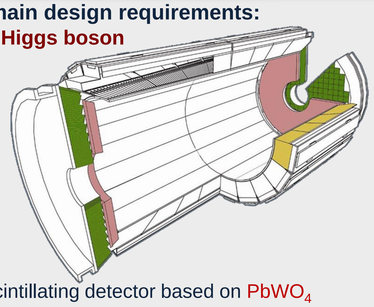

Decision:

ECAL is built as a homogenous scintillating detector based on $PbWO_4$ crystals, avalanche photo-diodes (APD) and vacuum photo triodes (VPT)

Scintillation crystals – $PbWO_4$

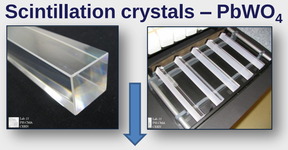

Photo-detectors – APD and VPT

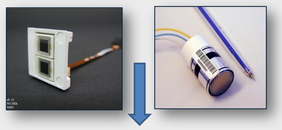

Design issue 1: Irradiation induces changes in $PbWO_4$ crystal transparency
Design issue 2: APD gain is rather sensitive to bias voltage (HV)
Design issue 3: Both crystal and APD response are highly sensitive to temperature changes (approx. ~ 2.4% per °C)

Control of these parameters is of crucial importance for ECAL

3 ECAL DCS objectives

Design objectives of the ECAL Detector Control System (DCS):

- Monitoring of the crystal and APD temperature stability (18.00 °C +/- 0.05 °C) and humidity level inside the ECAL } PTM/HM system
- Monitoring of temperature and water leakage sensors inside of the ECAL electronics compartments
- Automatic ECAL protection in case of problematic situations (hardwired interlocks, predefined control actions, alerting etc.) } ESS system
- Software control of parameterization and functioning of ECAL sub-systems (HV, LV, Cooling, Laser, DCU etc.) } DCS applications

Hardware (autonomous) subsystems:

- Precise Temperature Monitoring (**PTM**)
- Humidity Monitoring (**HM**)
- ECAL Safety System (**ESS**)

} developed in collaboration of ETHZ, Protvino and Belgrade groups

4 ECAL DCS layout

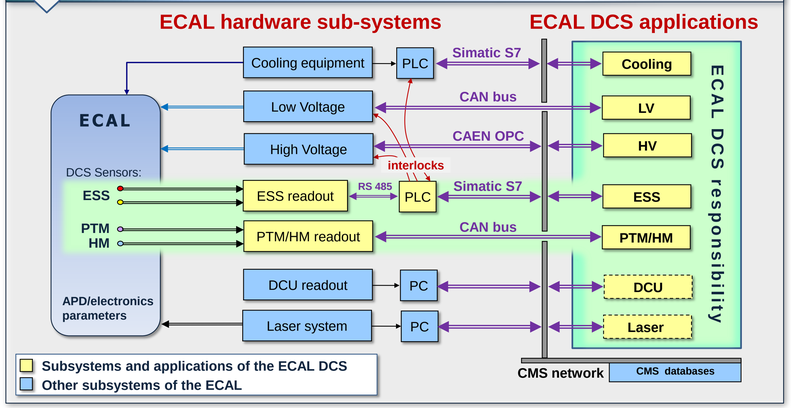

5 PTM/HM System

Functionalities:

1. Monitoring of temperature and relative humidity inside the ECAL detector;
2. Abnormal situation processing (over-temperature, high humidity);

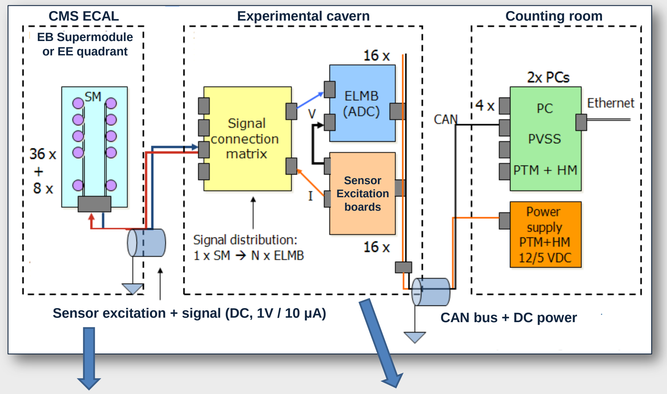

Temperature and humidity sensors:

- 360 + 80 NTC thermistors (EB+EE); pre-calibrated by manufacturer; Precision better than 0.01°C.
- 144 + 32 RH probes (EB+EE); Precision 5% RH [20 – 90% RH].
- Tested for radiation tolerance

Readout system with ELMB boards:

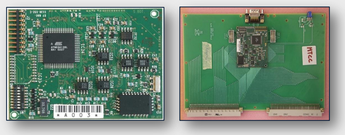

- Independent from the ECAL DAQ
- Based on ELMB modules (by ATLAS),
- Features 16-bit ADC, 64 channels analog MUX, DI/DO signals, CAN bus,

An example of the performance of the readout system:

- Excellent resolution
- Low noise level (**~ 0.008 °C**)

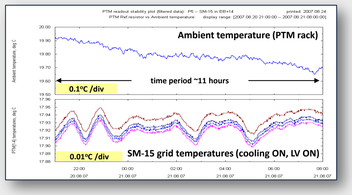

6 ECAL Safety System

Functionalities of the system:

1. Full autonomy of the system
2. Temperature monitoring of ECAL electronics Precision better then 0.1 °C
3. Detection of water leakage (WLD) inside the ECAL
4. Radiation tolerance according to specifications
5. Reliable hardware interlocks and control signals to:
   - HV system crates (hardware interlocks)
   - LV system crates (hardware interlocks)
   - Cooling system (flow and temp., WLD, watch-dog)
   - operator and system experts (PVSS, SMS, Email)

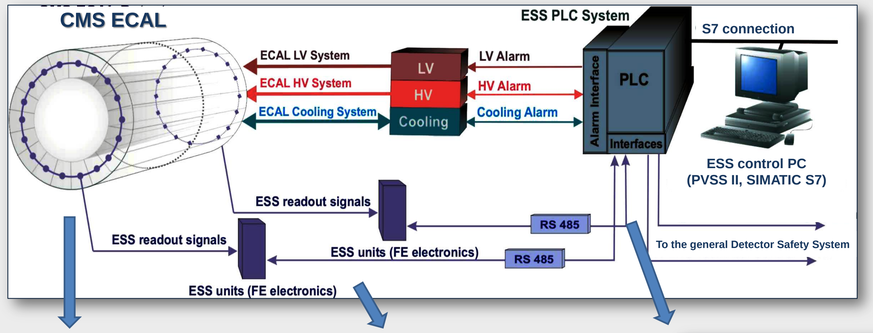

Temperature and WLD sensors:

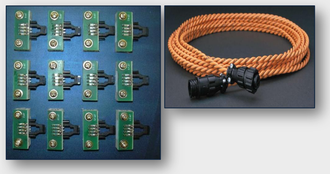

- 352 SMD 470 Ω NTC thermistors positioned in redundant pairs
- 44 leakage detection sensors by RLE Technology
- Tested for radiation tolerance up to the equivalent dose of 200 kGy

ESS Readout Units

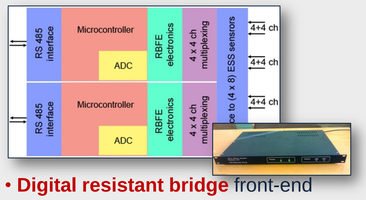

- **Digital resistant bridge** front-end
- Redundant architecture

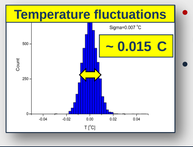

- Radiation tolerance to doses of up to 60 Gy
- Low noise level (fluctuations **~ 0.01 °C**)

- Siemens SIMATIC PLC system (S7-400H and S7-300 family)
- Redundant system Effective MTBF ~ 10 years
- Fault-tolerant / Fail-secure
- Digital filtering (2nd IIR NF filter)

7 ECAL DCS software

Control software based on:

- ETM PVSS SCADA tool for development and running of control systems
- Standard LHC JCOP Framework components (Finite State Machine (FSM), Access Control etc.)

FSM control tree of CMS ECAL DCS

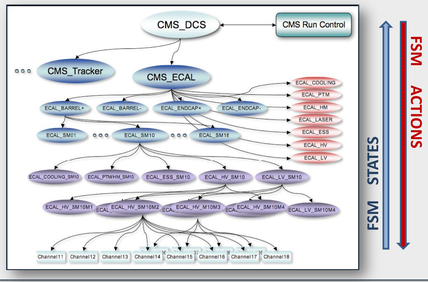

ECAL DCS applications integrated into the CMS DCS

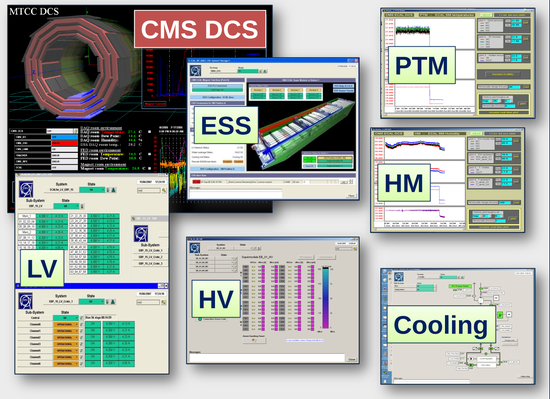

1) Institute for Particle Physics, ETH Zürich, Switzerland
2) VINCA Institute for Nuclear Sciences, Belgrade, Serbia
3) IHEP, Protvino, Russia
4) CEFET/RJ, Rio de Janeiro, Brasil
5) CERN, Geneva, Switzerland
6) Faculty of Physics, University of Belgrade, Serbia
7) INFN Rome, Italy
8) University of Minnesota, USA

8 Acknowledgements

Swiss National Science Foundation, Switzerland
Swiss agency for Development and Corporation (SDC), Switzerland
Ministry of Science and Technology, Republic of Serbia