CAD MODEL AND VISUAL ASSISTED CONTROL SYSTEM FOR NIF TARGET AREA POSITIONERS *

E. Tekle†, R. Wilson, T. Paik
Lawrence Livermore National Laboratory, Livermore, CA 94550, USA

Abstract

The National Ignition Facility (NIF) target chamber contains precision motion control systems that reach up to 6 meters into the target chamber for handling targets and diagnostics. Systems include the target positioner, an alignment sensor, and diagnostic manipulators (collectively called positioners). Target chamber shot experiments require a variety of positioner arrangements near the chamber center to be aligned to an accuracy of 10 micrometers. Positioners are some of the largest devices in NIF, and they require careful monitoring and control in 3 dimensions to prevent interferences. The Integrated Computer Control System provides efficient and flexible multi–positioner controls. This is accomplished through advanced video–control integration incorporating remote position sensing and realtime analysis of a CAD model of target chamber devices. The control system design, the method used to integrate existing mechanical CAD models, and the offline test laboratory used to verify proper operation of the control system are described.

INTRODUCTION

The NIF target chamber is a 10 meter diameter sphere under vacuum environment with a thick protective wall that is penetrated by the arriving laser beams and ten large target and diagnostic instrument positioners (see figure 1). Positioners are moved by remote control to reach 6 meters into the target chamber and aligned to an accuracy of tens of micrometers using the Integrated Computer Control System [1]. Operators monitor positioner movements using video cameras in the Chamber Interior Viewing System (CIVS). CIVS magnifies the central region of the chamber to permit precision adjustments, which limits the camera field of view enough to impact situational awareness afforded to the operators. Without advanced control system assistance, several operators must manually monitor the positioner movements to protect against potential collisions.

To solve this problem, a CAD model–based control system is being developed that employs automated route finding, sequenced multi–positioner operation, clear–path calculation and video–integrated control for coordinating multiple positioners concurrently. Model-based control augmentation will allow the operator to observe any space within the chamber and ensures system integrity and reliability. The system is much more efficient and requires fewer personnel to operate.

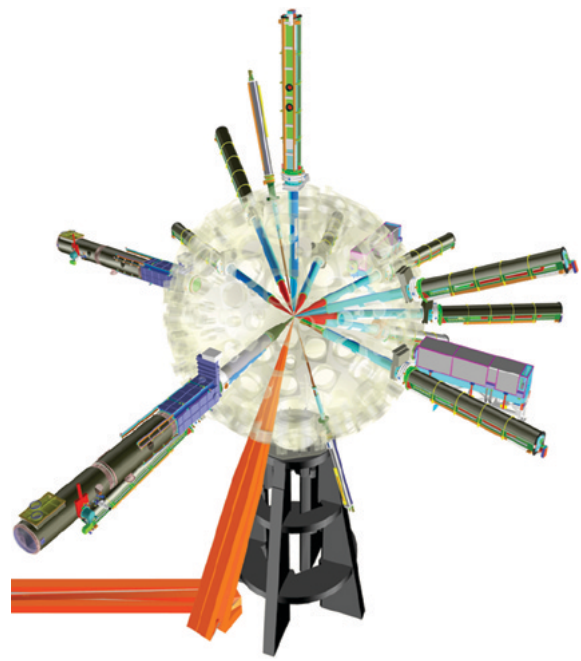

Figure 1: Model of 10 meter diameter target chamber shows the positioners and 4 of the 192 planned laser beams.

Chamber Alignment

For a NIF shot [2, 3] to be fired, all positioners need to be in place, and the 192 laser beams need to be precisely aligned on the 10mm–sized target. The positioners need to be aligned with an accuracy of tens of micrometers.

Alignment is a time–consuming process. To help shorten the shot cycle, concurrent positioner operation is supported. A Target Area Coordinator controls overall positioner operation through a supervisory view. This coordinator can lock and unlock positioners, and establish individual depth limits. This allows managed concurrent operation of the target area positioners.

Different live video views are presented to help the operators visualize the three–dimensional configuration of the positioners. Bar graphs are used to show insertion depths and proximity zones. Video views from CIVS cameras are changeable with pull–down menus.

* This work performed under the auspices of the U.S. Department of Energy by Lawrence Livermore National Laboratory under Contract DE-AC52-07NA27344.

† et@llnl.gov

VISUAL ASSISTED CONTROL

In order to track positioner movement within the chamber, virtual axes are defined along the field–of–view of each CIVS camera. Cross–coupling matrices ensure the positioner drives follow these virtual axes while providing depth boundaries, speed limits and motion increment restrictions.

Calibrated Video

Each video camera is calibrated such that every frame is a 2D slice of the 3D space around the focal–point and field–of–view of the camera. A reference point and a transformation matrix map any point (x, y, z) in the chamber coordinate system to pixels (x, y) in the camera coordinate system.

Video–Integrated Control

Calibrated video views allow operators to "drag" a movement command across live video of the positioner. The control system translates this into a complex set of motor moves and describes the proposed move to the operator in human terms (e.g., "This move will take 10 seconds, insert 14 mm, and go up 3.5 mm"), and indicates which motors will be utilized for the move.

Once the move is approved, the positioner is placed in motion, and the operator observes the motion tracking the initial "dragged" command in realtime.

Operator Aids

A number of visual aids are utilized. Video overlays provide textual information and guides to indicate alignment target waypoints and obstructions. Additional visual–aids include peripheral views, the coordinate system, scale value, zoom level, etc.

AUTOMATION

Automation of chamber alignment is essential for achieving efficient shot controls because the process is complex and arduous for the operator. The key ingredients to full automation are algorithms that enable multi–positioner move sequencing, automated path finding, model–based realtime analysis and visualization tools (see *CAD Integration*).

Composite Control

Composite controls provide concurrency through synchronization of multiple threads of control that script complex moves and coordinate multiple devices. Entire alignment sequences comprised of one to all positioners can be scripted at the highest level of integration.

Route Finding

Positioners are moved along virtual axes (see *Visual Assisted Control*) in order for their motion be tracked on live video. Virtual axes may be visualized as highways on a city map with speed limits and maximum travel distance (pause points). Routing is analogous to driving directions given by Google™ maps, in that the shortest route between two points is found from a pool of available virtual axes constrained by the various depth boundaries, speed limits and maximum travel restrictions. The key steps in the routing algorithm are:

1. Load available virtual axes within the range of travel
2. Create virtual axes zones based on depth boundary
3. For each zone:
   (a) Calculate move for each degree–of–freedom
   (b) Calculate move for each virtual axis and zone based on the matrix equation:

$$X = pinv(W) * V^T,$$

   where X is the calculated move on each virtual axis, $pinv$ is the pseudoinverse of a matrix, W is a matrix describing a set of virtual–axes and V is move needed

CAD INTEGRATION

Model–based analysis and tracking tools calculate clear-path routes that are collision free and efficient, while simultaneously augmenting live–video with model–views that verify the integrity of the simulation. Furthermore, model–based simulation provides a platform to validate the control system and shot configurations, train operators, and monitor the chamber interior throughout the shot lifecyle.

MockUp Visualization

DIVISION MockUp[1] (MockUp) is a large–scale digital mockup and simulation environment that is extendable for realtime visualization and analysis (see figure 2).

Plugin enhancements to MockUp allow configuration of the model at run–time and realtime visualization of all positioners with sub–millimeter accuracy. Five servers are dedicated to run MockUp instances for clear-path and proximity analyses, and remote video–augmentation. Two servers provide three–dimensional fly–through views of the chamber (see figure 3).

Model Verification

The MockUp model is verified by realtime comparison of images taken from CIVS cameras to an equivalent view generated simultaneously by MockUp. The location of each motor is also verified using the combination of absolute (linear or angular) encoder and step counts.

[1] DIVISION MockUp is a registered trademark of Parametric Technology Corporation.

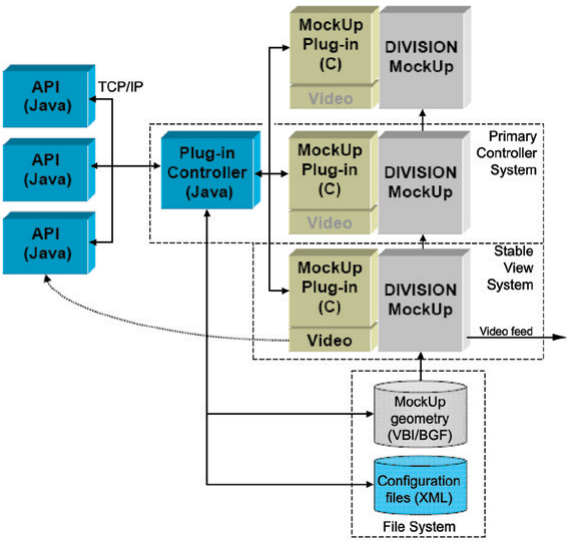

Figure 2: Block diagram of MockUp system enhanced for realtime visualization and analysis.

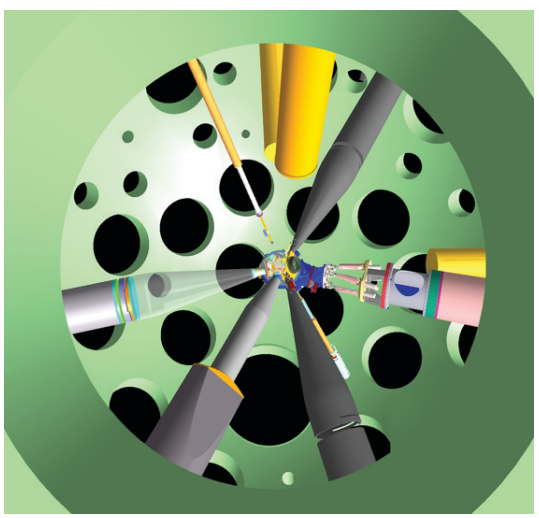

Figure 3: MockUp interior view of positioners through a laser port.

Collision Avoidance

Model analysis is used to verify every proposed move will avoid collision. Proximity zones are defined and monitored around every positioner. Alarms trigger if zone proximities are getting too close. The system disables all positioners prior to a potential collision.

TESTING AND VERIFICATION

A dedicated test laboratory integrates positioner simulators, digital cameras, PLCs, and other equipment. The fixed installation allows calibrated video views to be defined for life–like operation of the system.

Three positioner simulators are configured to mimic the target chamber installation. Ten digital cameras arranged around the lab provide the same camera–eye view of the positioners that the operators have in NIF. Equipment is mounted on an optics table to ensure calibrated camera views remain accurate for testing.

Hardware-based testing is supported by five–axis positioner simulators that have the same range of motion (such as reverse–steering, nod and roll) as the real positioners (see figure 4). The hardware provides a high-fidelity offline test environment. Software-based testing uses emulated virtual positioners to allow multiple concurrent tests to be conducted. Emulation is the preferred mode of testing during the early development phase as it is inexpensive and easy to set up.

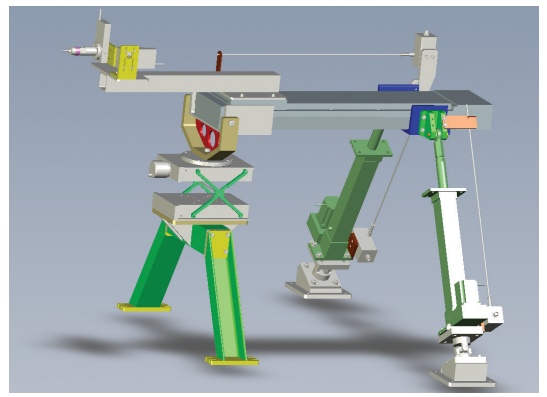

Figure 4: Multi–axis hardware simulators positioner test the control system and help train operators.

SUMMARY

The model–based visual control system is an advanced integrated operations tool for coordinating complex alignment of NIF positioners where a large fraction of the chamber interior is inaccessible for viewing. Model validation assures the system accurately represents the real system. Model augmented live video feeds provide feedback to operator during manual control operations. The automated controls keep the positioners interference free and provide operators with a view of the chamber interior from any vantage point at all times.

REFERENCES

[1] R. Carey, et al, “Status of the Use of Large–Scale CORBA-Distributed Software Framework for NIF Controls”, ICALEPCS 2005, Geneva, Switzerland, October 2005.

[2] L. Lagin, et al, “Shot Automation for the National Ignition Facility”, ICALEPCS 2005, Geneva, Switzerland, October 2005.

[3] E. Moses, “The National Ignition Facility: Path to Ignition in the Laboratory”, Fourth International Conference on Fusion Sciences and Applications, Biarritz, France, September 2005.

[4] P. VanArsdall, et al, “Status of the National Ignition Facility and Control System”, ICALEPCS 2005, Geneva, Switzerland, October 2005.

Disclaimer

This document was prepared as an account of work sponsored by an agency of the United States government. Neither the United States government nor Lawrence Livermore National Security, LLC, nor any of their employees makes any warranty, expressed or implied, or assumes any legal liability or responsibility for the accuracy, completeness, or usefulness of any information, apparatus, product, or process disclosed, or represents that its use would not infringe privately owned rights. Reference herein to any specific commercial product, process, or service by trade name, trademark, manufacturer, or otherwise does not necessarily constitute or imply its endorsement, recommendation, or favoring by the United States government or Lawrence Livermore National Security, LLC. The views and opinions of authors expressed herein do not necessarily state or reflect those of the United States government or Lawrence Livermore National Security, LLC, and shall not be used for advertising or product endorsement purposes.