UPGRADE OF CORRECTOR POWER SUPPLIES FOR POHANG LIGHT SOURCE*

I. S. Ko†, K. M. Ha, S. C. Kim, J. H. Suh, J. Y. Huang, H. S. Kang, and J. Choi
Pohang Accelerator Laboratory, Pohang 790-784, Korea

Abstract

There are 70 vertical and 70 horizontal correctors for Pohang Light Source. Until 2003, power supplies for these correctors were based on 1980's technology, so the global orbit feedback system was not possible with poor 12 bit resolution. In 2003, a task force team was assembled to develop new power supplies with BESSY type DAC cards. By summer 2004, two vertical correctors in each lattice were connected with new power supplies, and the global orbit feedback was available within the accuracy of 5 microns. However, this replacement was not enough to satisfy the beam stability requirement of 2 microns for PLS. We have launched another power supply design based on all digital technology. This attempt was completed within a year, and 80 units were assembled in house. Currently, the global orbit feedback system is running successfully with new digital power supplies and the compensation of chamber motion due to the thermal load by using digital displacement transducers attached on each BPMs.

INTRODUCTION

Pohang Light Source (PLS) has 12 cells with one super-period. There are 70 vertical and 70 horizontal correctors for orbit correction. PLS has provided stable photon beam to beamline users since corrector magnet power supplies (CMPS) were upgraded to more stable ones by 2005. CMPS for synchrotron radiation source is required to have long-term stability, high precision current control, and control repeatability. The CMPS has been upgraded two times incorporating the available technology of magnet power supply at those times.

Until 2003, power supplies for these correctors were based on 1980's technology with 12 bit of current granularity and the hysteresis current controlled full-bridge converter type, so the global orbit feedback system was not possible with poor 12 bit resolution. With the 12-bit power supply, 1 bit current change of CMPS resulted in about 6 μm change of global orbit, which is not acceptable to beamline users. As the 12-bit power supply was too coarse to be used in global orbit feedback, we had to replace the power supply with the granularity of better than 16 bit. In 2003, a task force team was assembled to develop new power supplies. At that time as a first upgrade model we decided to adopt DAC/ADC card developed for BESSY-II which is capable of 20-bit control granularity [1]. The first upgrade model was analog type. Only 22 among 70 power supplies for the vertical plane were replaced with the first upgrade model because of the budget limitation while 22 power supplies for horizontal plane were replaced with the modified module of the existing power supply whose DAC/ADC granularity was improved to 16 bit. The selected corrector magnets which are located upstream and downstream of the straight sections can effectively counteract the orbit change due to gap change of insertion devices. The orbit stability after the first CMPS upgrade was less than 1 μm for short-term (< 5 min) and 5 μm for long-term (> 12 hours).

However, this replacement was not enough to satisfy the beam stability requirement of 2 microns for PLS. In order to attain that requirement, more corrector power supplies should be replaced with better ones. Moreover some improvement was issued on the power supply itself; better stability and better control granularity. We have launched another power supply design based on all digital technology. This attempt was completed within a year, and 80 units were assembled in house. At that time we decided to adopt newly established-digital technology for magnet power supply which was developed in PSI [2]. We fabricated 70 power supplies with digital architecture for vertical plane and put them into operation in September 2005. The second upgrade of CMPS is fully digital technology and has a control resolution of 1 ppm and short-term (< 5 min) stability of ± 2 ppm and long term (< 24 hours) stability of ± 10 ppm [3]. The 22 power supplies of first upgrade model were moved to horizontal plane correctors. As the number of available good CMPSs was increased in both planes, 34 correctors were used in each plane for global orbit feedback. The resultant orbit stability for 12 hours improved to 2 μm, and the orbit variation at each correction step in global orbit feedback was not clearly seen in beamlines. The global orbit feedback runs every 2 seconds. The digital type power supply communicates with VME via fiber optics module at 5 Mbps.

HARDWARE CONFIGURATION

The control granularity of CMPS should be small enough to make the beam oscillation by orbit feedback invisible in beamline experiments. In order to get high precision control granularity, 19 to 24 bit DAC board was developed in BESSY-II. A power supply with digital control architecture was developed in PSI and successfully applied in DIAMOD for a few watts to 1 MW power supply. Digital-controlled power supply is capable of providing high resolution above 19-bit and

* Supported by the Ministry of Science and Technology of Korea.
† isko@postech.ac.kr

good stability below 10 ppm, and fast control. The digital controller consists of DSP, FPGA, and high resolution ADC.

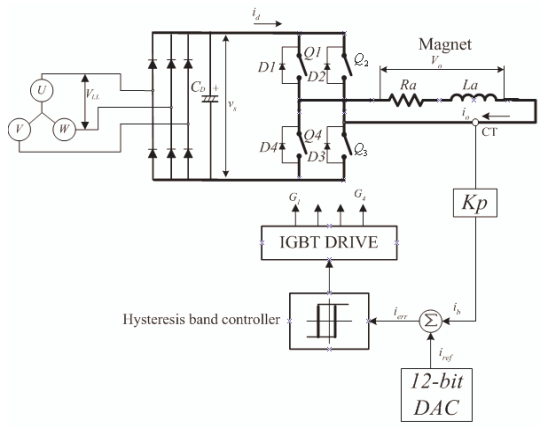

Figure 1: Circuit diagram of the old CMPS.

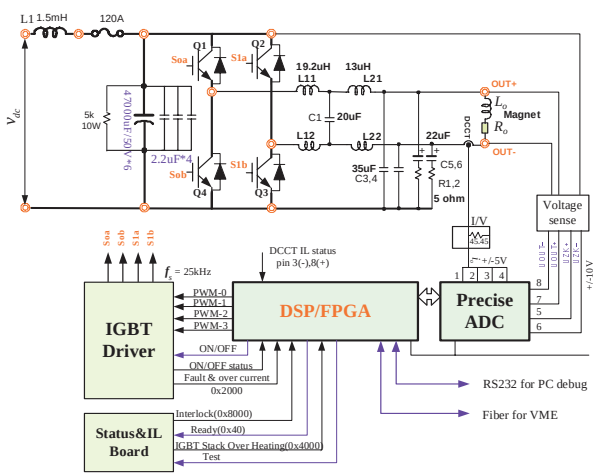

Figure 2: Circuit diagram of the digital control power supply.

Figure 1 shows the circuit diagram of the old CMPS with the switching frequency of 1.6 kHz and the DAC bit of 12-bit. The hysteresis current control for stabilizing the load current can not compensate the voltage change well because the frequency changes as the load condition changes.

Figure 2 shows the circuit diagram of the digital control power supply. The hardware is full-bridge switching type and is capable of four-quadrant action. IGBT is uni-polar type with 25 kHz switching and the 5-th order LC filter is used to get -80dB attenuation of switching frequency at the output. ULTRASTAB 867-201 DCCT (Danfysic) is used to get higher resolution of load current. The requirements of the digital power supply are: (1) step resolution smaller than 2 ppm, (2) ± 10 ppm long-term stability, (3) 4th or 5th output filter, (4) over 25 kHz switching frequency, (5) fast communication port for feedback operation. Table 1 lists the comparison of two type power supplies.

Table 1: Comparison of Two Type Power Supplies

Parameters	Digital PS	Old PS
Output voltage/current	± 110 A	
Load inductance	16 mH @1 kHz	
Operating quadrant	4 Q	2Q
Stability (0 sec to 60 sec)	± 1 ppm	± 20 ppm
Stability (> 12 hours)	± 10 ppm	± 100 ppm
Resolution of output current	> 19 bit	12-bit
Reproducibility	± 5 ppm	± 30 ppm
Filter cut-off frequency	4.5 kHz	None
Switching frequency	Unipolar 25 kHz PWM	Bipolar 1.6 kHz ~ 2 kHz

EXPERIMENTAL RESULT

If the high frequency switching noise and low frequency noise from the power supply is not perfectively damped in the vacuum chamber of corrector magnet, the stored beam can be influenced by that noise.

Figure 3 shows the output noise spectrum of the old CMPS and the digital CMPS. As the old model CMPS has no output filter, the switching frequency (1.6 kHz) and its higher harmonics are clearly shown, while the switching noise is perfectly damped in the digital CMPS as shown (b).

Figure 4 shows the short-term stability of the old CMPS and the digital CMPS measured at the load current of 55A. The old CMPS shows a stability of ± 20 ppm while the digital CMPS shows a stability of ± 0.5 ppm. The short-term stability is important in the dynamic correction power supply because the high resolution control can be assured after the short term stability is guaranteed. The short-term stability is determined by DDCT, ADC, Input/Output filter, and digital controller for current regulation. The long-term stability is influenced by external sources such as ambient temperature and the temperature coefficient of semi-conductor components.

Figure 5 shows the current variations of the setting and reading of two CMPS (P08CV1 and P08CV2) used in the orbit feedback for 48 hours. It is seen that the load current follows well the setting value during the orbit feedback run. Figure 6 shows the long-term stability of global orbit for one day. It is seen that the global orbit feedback keeps the orbit below 3 μm.

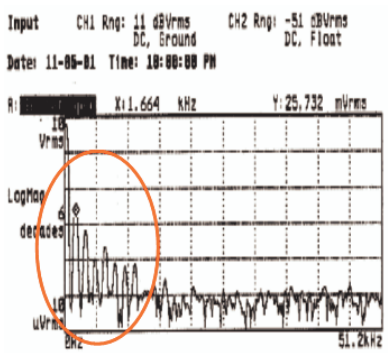

(a)

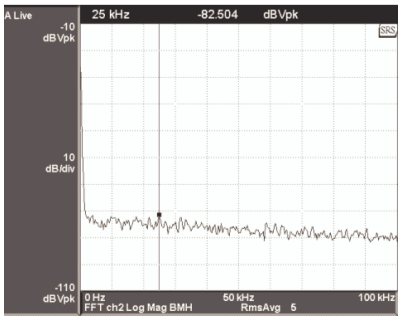

(b)

Figure 3: Output current noise spectrum: (a) Old CMPS, (b) Digital CMPS.

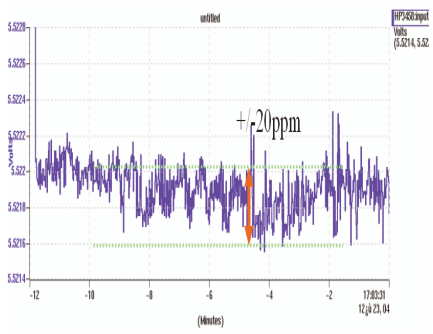

(a)

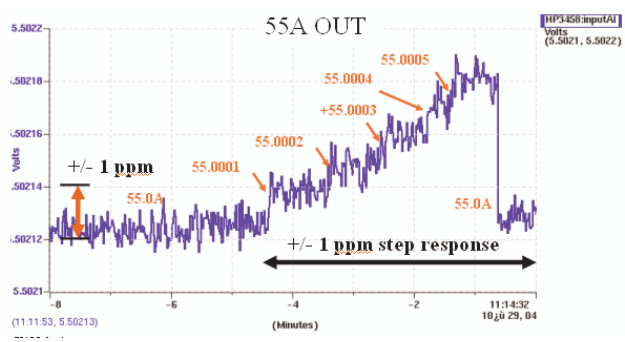

(b)

Figure 4: Short-term stability: (a) Old CMPS (20 ppm/(Div), b) Digital CMPS (1 ppm /Div).

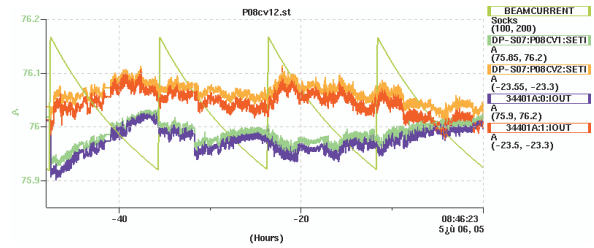

Figure. 5: Current variations of the setting and reading of two CMPS (P08CV1 and P08CV2).

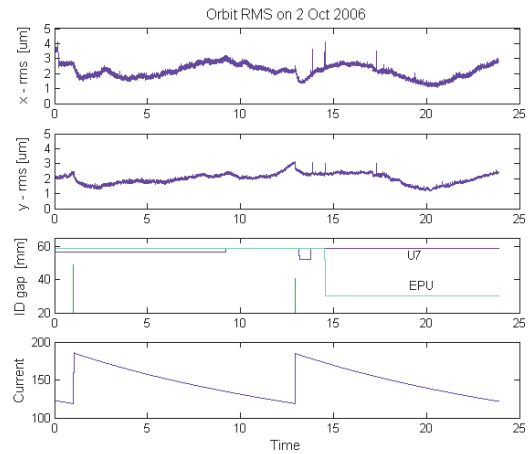

Figure 6: Orbit stability measured for one day.

CONCLUSION

PLS CMPS has been upgraded continuously since 2003, and played an important role in orbit stabilization. The high performance digital power supplies installed in 2005 have been working well up to now and the orbit stability has improved remarkably. The power supply itself shows a good reliability. Currently, the global orbit feedback system is running successfully with the digital power supplies and the compensation of chamber motion due to the thermal load by using digital displacement transducers attached on each BPMs [4].

REFERENCES

[1] K. Burkmann, et al., “Corrector power supplies with a DAC resolution up to 24bits based on 16 bit DAC devices,” Proc. of ICALEPS 2001, p157.

[2] L. Tanner and F. Jenni, Proc. of PAC 2001, p. 3681.

[3] K.M Ha, J.Y Huang, et al., “PLS fully digital controlled corrector power supplies,” ICALEPS2005, Geneva, Switerland.

[4] H. S. Kang, et al., “Compensation of BPM chamber motion in PLS orbit feedback system,” Proc. of PAC 2007, p. 290.