SPECTRA ACQUISITION SYSTEM FOR THE LNL ECR ION SOURCE

S. Canella, A. Galatà, M. Sattin,

INFN Laboratori Nazionali di Legnaro – Italy

Abstract

At Laboratori Nazionali di Legnaro (LNL) an Electron Cyclotron Resonance Ion Source (ECRIS) located on a 350 kV High Voltage (HV) platform may supply several species of positive ion beams to a superconducting accelerators complex: a low energy injector (PIAVE) and a medium energy linear booster (ALPI). The LNL ECRIS is in operation for nuclear experiments since late 2005.

At the end of last year a new spectra acquisition system was put into operation for the remote ECRIS set-up and beam control. The previous system was working only on a local scope on the high voltage platform, while the new one was required to be usable both on the local and on the remote control computers. This upgrade was planned to be software and hardware maintainable on different computer platforms (Linux and Windows PCs) and to cope with future changes in the hardware components.

Here a survey of this spectra acquisition system is given.

THE LNL ECRIS AND RF LINACS

The LNL ECRIS was built in 1991 to provide high intensity ion beams to PIAVE, an RF injector based on two Super Conducting (SC) Radio Frequency Quadrupole (RFQ) and eight SC Quarter Wave Resonators (QWR). To fit the RFQ injection velocity (β=0.0089), the source was placed on a high voltage platform adjustable up to 350 kV. After the injector, an RF Linac (ALPI, with 73 SC QWRs) may further accelerate the beams to a wide range of energies, depending on the ion mass and charge state.

From the LNL ECRIS several ion species beams (O, Ne, Ar, Kr, Xe) at high charge states have been extracted. At the end 2005, the first nuclear physics test using LNL ECRIS and following RF linacs was performed, with a $^{22}Ne^{4+}$ beam at 110-150 MeV.

THE LNL ECRIS REMOTE CONTROL

The LNL ECRIS control is based on a standard three-level architecture both for hardware and software [1].

In the console room a Linux PC is used to run the graphic interface for the ECRIS remote set-up and beam-time monitoring.

At the middle level an other Linux PC on the high voltage platform, equipped with Equinox boards and National Instruments (NI) boards has to manage embedded controllers connected through RS232 links and to control field devices directly attached through IN/OUT analog and digital channels. The local PC may also be used for local control during maintenance time, when the HV platform is switched off.

The data connection between top and middle level PCs is a standard Ethernet, on an optical link in the section from the HV platform to ground (see Figure 1).

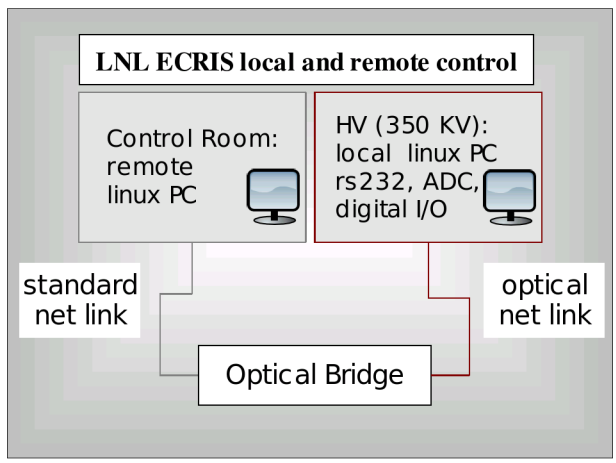

Figure 1: local and remote ECRIS control

On the remote and local control PCs the software graphic interface is an X11 extension of an old man-machine interface, for compatibility with the existing code. Standard TCP/IP sockets are used for network communications in the middle layer software modules. Embedded controllers on RS232 links and field devices connected to the ADCs and digital I/O channels are managed by software modules (servers) running on the HV platform PC.

The new spectra acquisition system has been built in this existing ECRIS control system framework.

THE NEW SPECTRA ACQUISISTION SYSTEM

The LNL ECRIS spectra acquisition system has to control a programmable sequence of operations on the analyser bending magnet: during the magnetic field ramps

on the 90° bending magnet it gets data coming from a gaussmeter measuring the field in the analyser and the related beam currents measured on a Faraday Cup immediately downstream the magnet (see Figure 2)

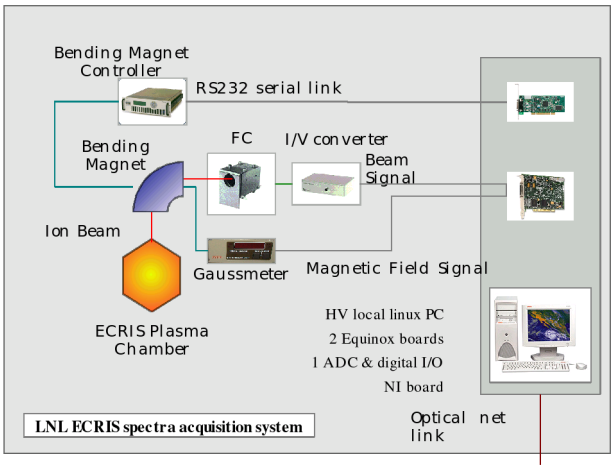

Figure 2: the LNL ECRIS spectra acquisition system

Hardware

In the ECRIS spectra acquisition system the following hardware devices are involved:

- the dipole (bending magnet), through its power supply (Danfysik system 8000), to which commands have to be sent by a RS232 link; most commands are sent to set or increase/decrease the current between lower and upper limit values, but other commands are sometimes necessary to reset fault states and to monitor the actual conditions of the device, a complete magnet control panel is therefore necessary;
- a gaussmeter (Group3), giving as output a voltage signal proportional to the magnetic field in the dipole; this is the input of one of the ADC channels of the NI ADC board on the local PC;
- a Faraday Cup (FC) with its insertion/extraction system and 2 associate digital binary signals: to insert and extract the FC from the beam line and to get the current position of the FC;
- a logarithmic I/V converter (Danfisyk, system 5000, model 538), to acquire in a large range of values (from 1 nA to 100 μA) the beam current in the FC, the I/V converter output being an analog voltage signal in the range 0-5 V; the voltage signal from the I/V converter is sent to an other channel of the NI ADC board on the local PC; the log-linear characteristic is used to get back to a linear scale for beam current peak values in the final scan plots.

Software

For the ECRIS spectra acquisition system three new modules were added to the control system in the local Linux industrial computer, on the HV platform, and two of them (the man-machine interface and the plotting tool) also in the remote supervisory Linux PC.

A software module (spectra_server, C-language), on the local PC, jointly manages the bending dipole and the two 16-bits ADC channels on a local NI acquisition board (one for the magnetic field, the other for the FC current). It performs slow current ramps on the bending dipole and acquires voltage signals related to the magnetic field in the dipole through the Group3 gaussmeter and to the total beam current collected by the FC through the logarithmic I/V converter, recording the acquired data on local files. A typical scanning ramp to acquire 5000 points lasts about 1 minute.

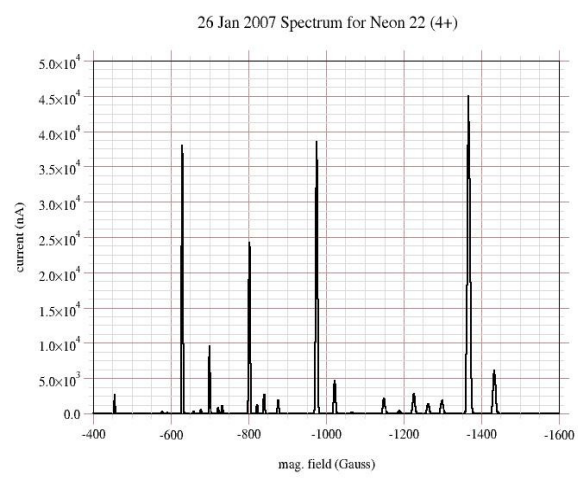

Figure 3: Spectrum acquired for a 2006 Ne22 beam

Recorded data may be immediately checked at the end of each acquisition run by a general purpose scientific tool (Grace-5.1.20 [2]) that was installed and configured on the HV local PC; in Figure 3 an example is shown of data taken and plotted during the beam preparation of one of the 2006 LNL scheduled nuclear experiments.

Both on the local and the on remote computers a new graphical user interface module (NetClient_spectra, JAVA Swing, generated by Netbeans IDE [3]) was also installed to perform customized beam scanning procedures and to start and monitor the data acquisitions. In Figure 4 an example is given of this JAVA graphical user interface module.

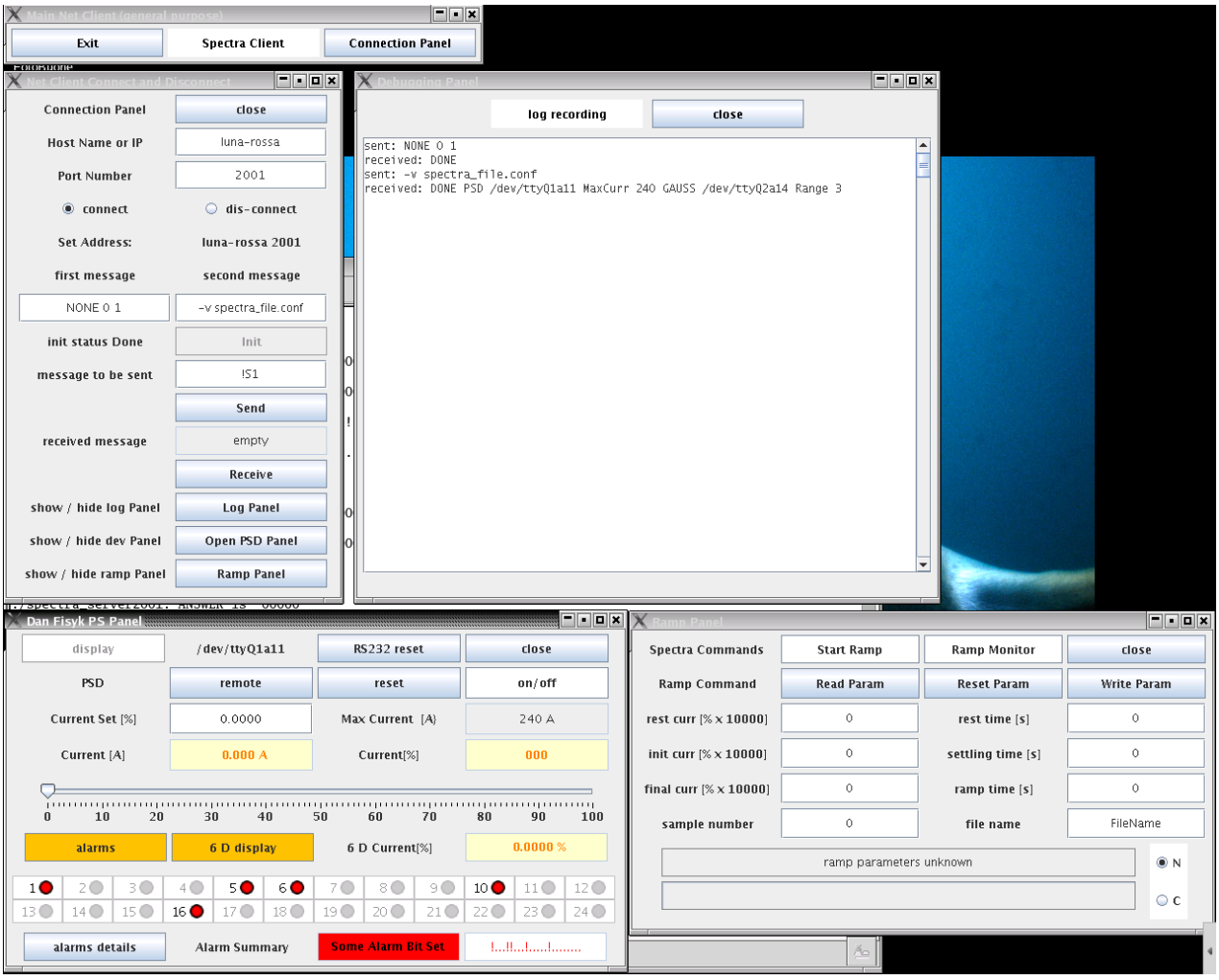

Figure 4: The JAVA graphical user interface for the LNL ECRIS spectra acquisition system

CONCLUSIONS

The new LNL ECRIS spectra acquisition system was planned at half 2006 when the feature of remote control for all parameters of the source became mandatory. Except for the logarithmic I/V converter, installed on the HV platform just for the new spectra acquisition system, the other devices (dipole controller, FC, gaussmeter) are the same previously used on the local scope. The local PC including an ADC board and a set of digital I/O lines was already in use for the general ECRIS remote control. Software development made large re-cycling of existent modules for the ECRIS remote control system. The only completely new module is the JAVA graphical user interface, that could be produced fast and easily thanks to the NetBeans IDE. The availability of open source graphical tools for XY plots like Grace further helped in rapid prototyping and development. The new system was put into operation by fall 2006.

REFERENCES

[1] G. Bassato, S. Canella, A. Battistella, “The Control of the new PIAVE Injector at LNL”, Proceeding of ICALEPCS’05, Geneva, October 2005.

[2] http://plasma-gate.weizmann.ac.il/Grace/

[3] http://www.netbeans.org/