METROLOGICAL TESTING OF DLS TIMING SYSTEM

Y. Chernousko, A. Gonias, M. T Heron, Diamond Light Source Ltd, Didcot, UK
E. Pietarinen, J. Pietarinen, Micro-Research Finland Oy, Helsinki, Finland

Abstract

The Diamond timing system is the latest generation development of the design, principles and technologies currently implemented in the Advanced Photon Source and Swiss Light Source timing systems. It provides the ability to generate reference events, distribute them over a fibre-optic network, and decode and process them at the equipment to be controlled. The timing system has now been in operation for more than a year, but questions of time stability, response time, etc. are still critical for us and for builders of future machines. This paper presents the methodology and results of time measurements for the timing system as a whole (including the fibre-optic network) and for its individual components.

INTRODUCTION

The Diamond Timing system is based on the new-generation event system modules (series 200) developed by Micro-Research Finland Oy [1]. This work is devoted to metrological issues of the timing modules and the system as a whole. Tests were conducted on modules both on a laboratory bench and installed in the system.

The following equipment was used during measurements:

- LeCroy WavePro 7300 oscilloscope (3 GHz bandwidth)
- Rode & Schwarz SML-01 signal generator (up to 1.1 GHz range)
- Magazine of optical delays, based on the same type of optical fibre which is used in a distribution timing system network (MMF MaxCap-300 from Draka Comteq). This optical delay module includes fibre cores of 5, 10, 20, 40, 80, 160, 290 and 550 meters of length
- Standard fan-out module
- Different types of signal converters: sine wave to PECL level, optical signal to PECL level and the reverse.

EVENT SYSTEM MODULES

Diamond uses about 50 VME-based event receivers (VME-EVR) and 120 modules in PMC form factor (PMC-EVR). VME-EVRs are mainly used for beam diagnostics systems and to trigger the pulsed elements of the Linac and the injection-extraction systems of the booster and storage ring. PMC-EVRs serve systems where the number of output ports and time stability are less critical. All EVRs are driven by an event generator (EVG) synchronous with the RF clock at a data rate of 2.5 Gbps through the timing system distribution network, which has a multi-star configuration with fan-out modules at its nodes and is based on OM3 optical fibres. During design work we expected a strong dependence of the stability of decoded events on fibre length, but the following tests demonstrated only a weak dependence.

Stability of Decoded Events and Dependence of Stability on Fibre Length

The layout shown in Fig. 1 was realised in laboratory conditions. It includes an EVG connected with VME- and PMC-based event receivers through optical delay lines of different lengths and fan-out modules. Both EVRs decode the same event codes. Their stability is defined by the standard deviation of the skew between output pulses and the RF clock

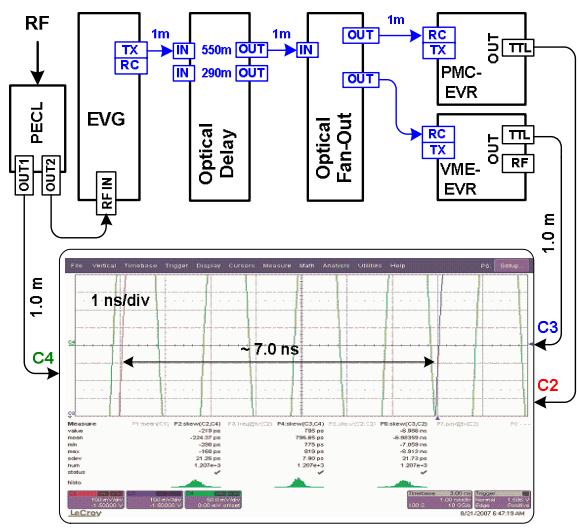

Figure 1: Stability of decoded events.

The results of measurements are shown in Table 1 and indicate:

- The stability of TTL output signals from the VME-EVR is at least three times better than that of those from the PMC-EVR and does not exceed 9 ps
- The length of the optical fibre connecting the EVG and the EVRs has no significant influence on RMS jitter, at least up to 800 meters.

Table 1: EVRs stability and fibre length

EVG-EVR fibre length (meters)	**2**	**553**	**844**
VME-EVR StDev	6.87 ps	7.90 ps	8.14 ps
PMC-EVR StDev	21.64 ps	21.25 ps	21.15 ps

Similar tests for signals from the PECL ports of the VME-EVR give 10% better results than for TTL signals from outputs on transition boards, due to the sharper edges of the signals from the PECL ports.

Superposition of decoded events from outputs of event receivers indicates that the response time to an incoming event for the PMC-EVR is one period of the event clock less.

Response Time of Event System Modules

The EVG produces event messages which include a byte of timing event code and data byte of distributed bus. In the EVG transmitter port these bytes are converted to a serial stream of 10-bit characters using standard 8B/10B encoding. At present, up to 20 functional and 8 service events are transmitted across the timing system network for all operational modes of the Diamond machines and supporting functionality of the system. In case of absence of "useful events" vacant bytes are occupied by the character K28.5 which corresponds to 0xBC code and bit stream of 0011111010 (or 1100000101) [2]. Fig. 2 shows a layout allowing response times for EVG and EVR modules to be determined; it also shows how events are transmitted over the distribution network.

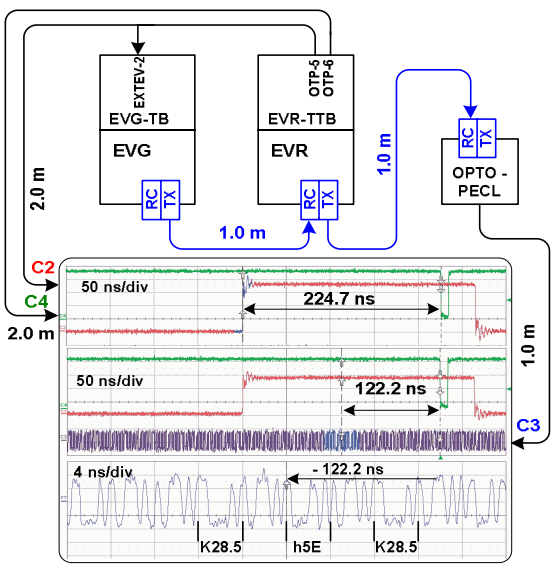

Figure 2: Definition of response times for EVG and EVR.

The EVG issues an MPS-TRIP event stimulated by a trigger on the EXTEV-2 port. This event corresponds to 0x5E code and a serial bit stream of 0111100101 (or 1000011010). The EVR receives the event stream, decodes MPS-TRIP events and outputs them as 10 ns pulses on port OTP-6. It is possible to estimate the sum of delays between the EVG trigger pulse and the EVR decoded event as 220.0ns, with a 1 meter fibre patch taken into account. The processing time for the 0x5E event in the EVR is about 128.0ns, with delays in the EVR transmitter port and the Opto-PECL adaptor taken into account. The EVG response time to an external trigger is then the difference between the EVG-EVR delay and the EVR processing time, i.e. 92 ns.

Response Time of Diamond Timing System

Measurement of the global response time for the Diamond timing systems was conducted in the linac CIA with the BR-INJ event (Fig. 3).

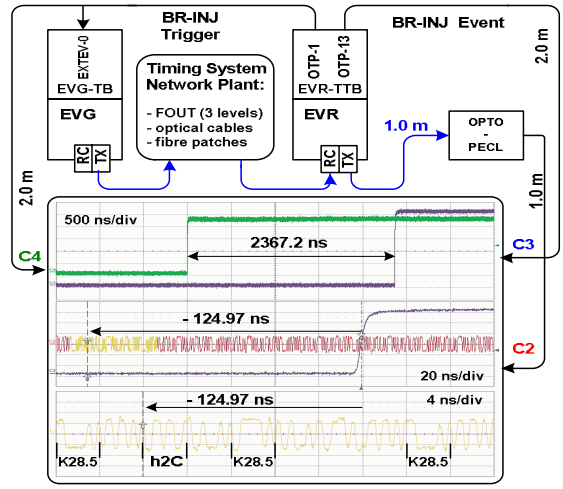

Figure 3: Diamond timing system response time.

This event code 0x2C is used for indication of beam injection into the booster. The event is stimulated by an external trigger produced by an EVR. According to the oscilloscope pattern the EVG trigger pulse and BR-INJ decoded event pulse are shifted with respect to each other by 2367.2 ns. Oscilloscope traces shown below identify decoded BR-INJ event (0x2C) with its network pattern "0011011001" [2].

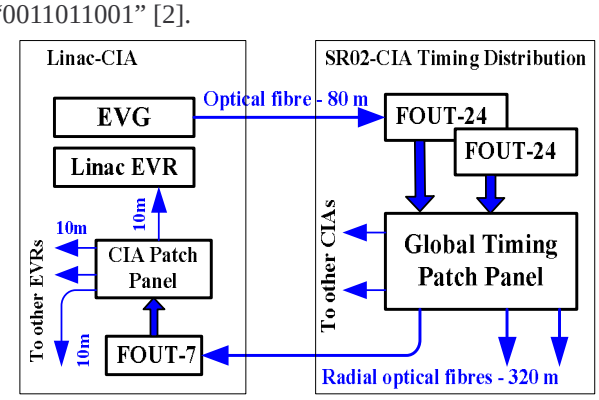

Figure 4: Diamond timing system network plant structure.

The system response time consists of EVG and EVR processing times and propagation delay time along timing system network plant (Fig. 4).

LINAC GUN DRIVER SET

The gun driver set consists of two modules – Gun transmitter (GunTX) and Gun receiver (GunRC). Each of these has two independent channels which provide triggering signals on the gun high voltage platform for single-bunch and multi-bunch Linac operational modes. As there is no RF signal in the Gun area, stability tests of

GunRC output pulses were conducted in laboratory conditions with the set-up shown on Fig. 5.

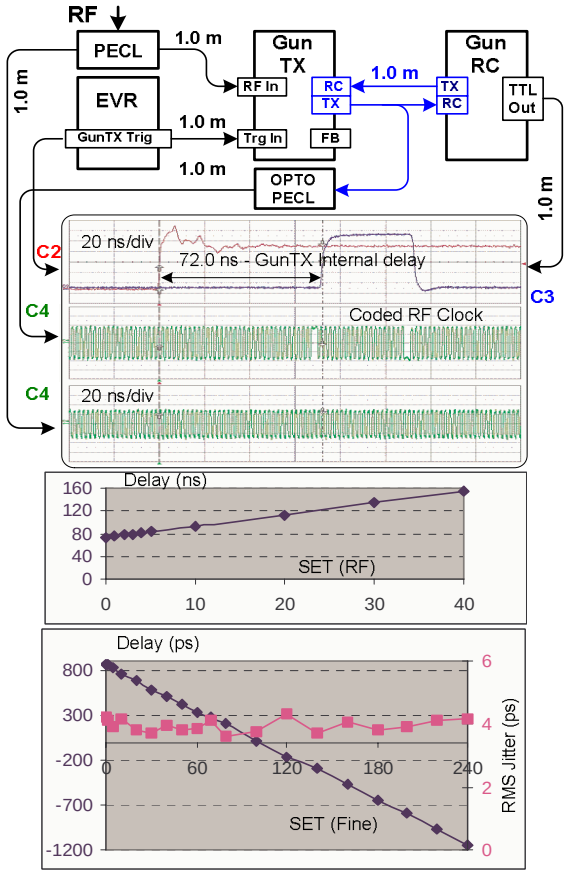

Figure 5: Stability test of Gun driver set.

These tests allow demonstration of:

- How the edges of the triggered pulse are coded in the transferred RF clock,
- A GunTX internal delay of 72.0 ns with respect to the external trigger pulse (from EVR),
- Good linearity of delay change in Fine mode (~ 8.5 ps delay step in a range of 2 ns)
- RMS jitter of the GunRC output pulse with respect to the RF clock is in range of 3.5 – 4.0 ps

FOUR CHANNEL TIMER BOARD

Four channel timer boards (4CHTIM) are used in two installations:

- Beamline BL06 - for synchronizing the laser trigger with a stand-alone single bunch of the storage ring (camshaft mode)
- Beam diagnostic optical chamber - for streak camera triggering

In both cases precision of time tuning and stability of the triggering pulses produced are important. Tests of these parameters were conducted directly on working equipment of BL06 according to the schematics in Fig. 6. The 4CHTIM board is triggered by SR-CLK from the EVR and counts RF-CLK signals taken from the RF distribution system which is based on low-loss co-ax cables.

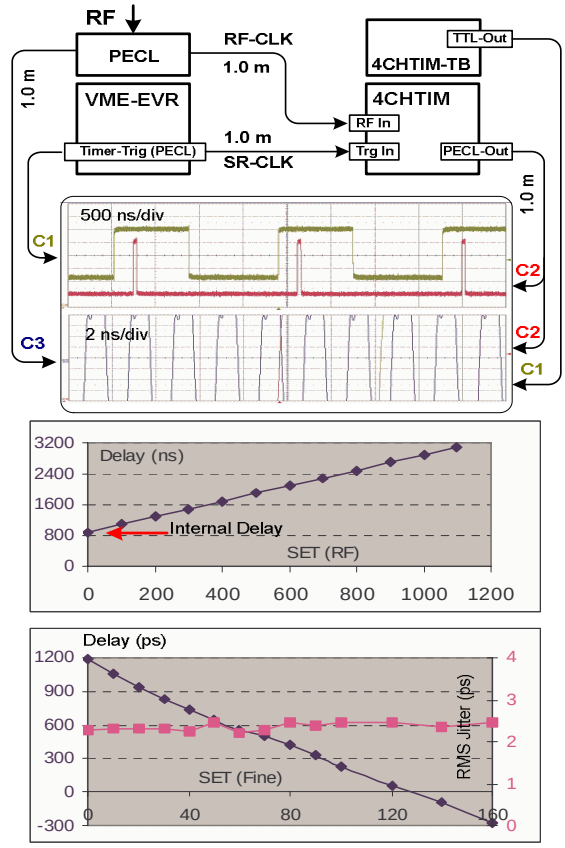

Figure 6: Stability tests of 4 Channel Timer Board.

The results of the measurements are:

- Good linearity of delay change in Fine mode (with resolution of ~ 8.5 ps in range of 2 ns)
- RMS jitter of output signals does not exceed 2.5 ps for PECL ports but is slightly higher (3.5 ps) for TTL levels from the transition board

CONCLUSION

Conducted measurements confirmed good precision and stability parameters of the timing system which completely satisfy the requirements laid in the specification and reflected in [3].

REFERENCES

[1] Micro-Research Finland Oy Home page, http://www.mrf.fi

[2] Rocket IO Transceiver User Guide, Xilinx, UG204 (v.2.5), December, 2004

[3] Y. Chernousko, A. Gonias, M. Heron, T. Korhonen, E. Pietarinen, J. Pietarinen, “Progress in Timing System Developments for Diamond Light Source”, ICALEPCS’05, Geneva, 2005